LUNENBURG TOWN REPORT 2003

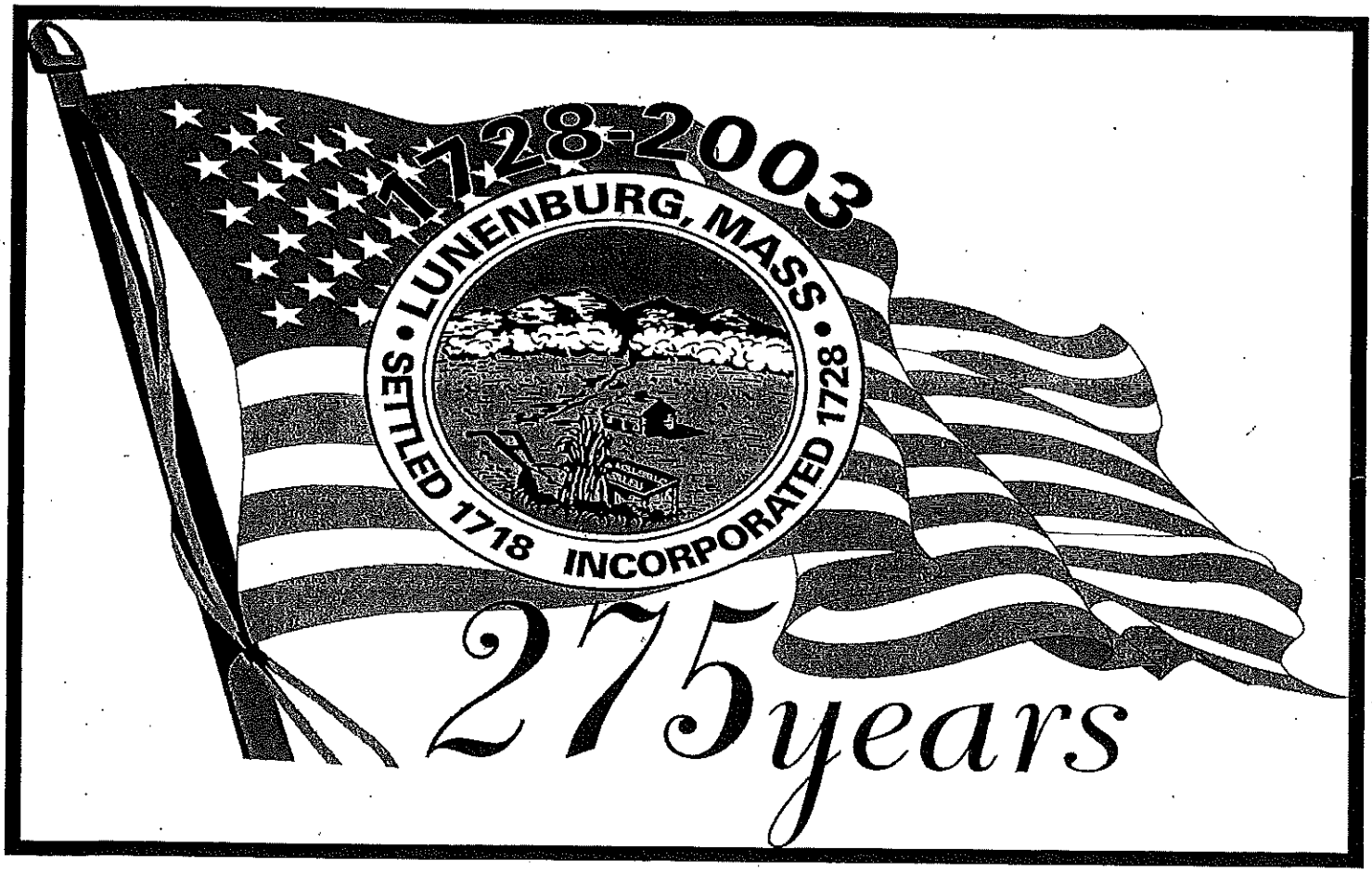

Logo designed by Kimberly Morse

MEMORIAM

RONALD LAMOTHE
1941-2003

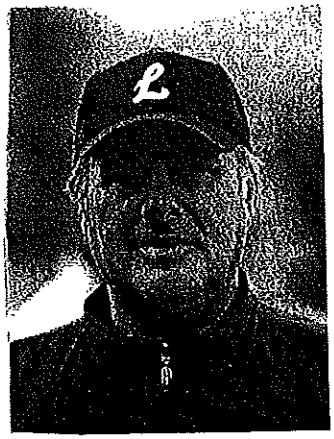

Every once in a while, an individual comes into our lives who inspires us through his words, deeds, commitment and simple presence. When this occurs, we know immediately how fortunate we are. Ron Lamothe was one such individuall Known as the architect of the Lunenburg baseball program, Ron has been on the minds of the community, past and present players and coaches ever since his passing from cancer on January 10, 2003. He touched the lives of many through his years of teaching, coaching and civic involvement.

Ron taught social studies for 34 years, was active in local politics, coached baseball for 28 years and football for 32 years. Was named to the Massachusetts Assistant Football Coaches Hall of Fame and Massachusetts Baseball Coaches Association Hall of Fame. He was a leader in town government as an active member of the Board of Selectmen, Charter Commission, Library trustees and Community Council. Plain and simple Ron Lamothe was what Community service and High School athletics are all about—dedication, teamwork, passion, respect and love.

RICHARD F. MULLIGAN
1928-2003



Dick was a life long resident of Lunenburg and the Athletic Director at the High School for over 25 years. He distinguished himself as a coach in track and basketball. During his long tenure from 1958 to 1976 as track coach he had a 12-year winning streak. He was instrumental in starting the indoor track program in Central Massachusetts and was inducted into the Massachusetts State Coaches Hall of Fame.

Over the years, Dick coached teams that accumulated records close to rivaling those compiled by any coach in Massachusetts. He had a profound effect as a caring individual with a genuine interest for youngsters involved in the athletic program. He was a man that was totally involved and he made everyone feel important. He was an excellent example for all to emulate.

I N D E X

DEPARTMENTS	PAGES
About The Town	2
Accounts, Summary of	52-65
Assessors	48
Balance Sheet	49
Births	74-75
Bonded Indebtedness	67-69
Building Inspector/Zoning Official	10
Capital Planning	10
Cemetery Department	9
Central Massachusetts Mosquito Control	11
Collection of Taxes	70
Conservation Commission	12
Council on Aging	12
Deaths	78
Department of Public Works	13
Director of Facilities & Grounds	47
Elections Town/State	91-93
Fire Department	21-23
Health	14
Historical Commission	18
Housing Authority	18
Library	20
Marriages	76-77
Meetings	3
Montachusett Regional Vocational Technical School	29-34
Nashoba Boards of Health	15-18
Office Hours	2
Officials, Elected and Appointed	4-7
Park Department	21
Payroll Report	94-101
Planning Board	19
Police Department	23-25
Receipts	50-51
Reconciliation of Treasurer's Cash	66
School Reports	29-46
Selectmen/Sewer Commissioners	8
Technology Department	25
Town Meeting Minutes	79-90
275th Anniversary Committee	26-27
Trust Funds & Investments	71-73
Zoning Board of Appeals	25

ABOUT THE TOWN

SETTLED:	1718
INCORPORATED:	August 1, 1728
TYPE OF GOVERNMENT:	Town Meeting
LOCATION:	North Central Massachusetts
COUNTY:	Worcester
ELEVATION AT TOWN HALL:	Approx. 570 ft above mean sea level
LAND AREA:	26.63 square miles
TOTAL AREA:	29 square miles
TOTAL ROADS:	Approximately 98.6 miles
STATE ROADS:	6 miles
POPULATION:	9264 (2000 U.S. Census)
	9650 (2003 Town Census)
DENSITY:	353 persons per square mile
ASSESSED VALUATION:	$979,839,900.- Real Estate
	$ 16,455,400. - Personal Prop.
TAX RATE:	$ 14.20 (Fiscal 2004)
UNITED STATES SENATORS IN CONGRESS:	John F. Kerry (Boston)
___(Washington, D. C. 20510)	Edward M. Kennedy (Boston)
REPRESENTATIVE IN CONGRESS:	John W. Olver
___1st Congressional District	House of Representatives
	(Washington, D.C. 20510)
STATE SENATOR:	Robert A. Antonioni
___ Worcester & Middlesex District	(State House, Boston 02133)
REPRESENTATIVE IN GENERAL COURT:	James Eldridge, Acton
37th Middlesex District	(State House, Boston 02133)

OFFICE HOURS

Assessors' Office	Monday, Wednesday & Thursday	8:00 AM - 4:00 PM
	Tuesday	8:00 AM - 6:30 PM
	Friday	CLOSED
Building Department	Monday, Wednesday & Thursday	8:00 AM - 3:30 PM
	Tuesday	8:00 AM - 6:30 PM
	Friday	CLOSED
Conservation Commission	Monday and Thursday	8:00 AM - 4:00 PM
	Tuesday	8:00 AM - 6:30 PM
Council on Aging	Monday thru Friday	8:00 AM - 4:00 PM
Board of Health	Monday and Wednesday	8:00 AM - 3:30 PM
	Tuesday	8:30 AM - 6:30 PM
Highway Department	Monday thru Friday	7:00 AM - 3:00 PM
Planning Board	Monday thru Thursday	9:00 AM - 4:00 PM
Ritter Memorial Library	Monday thru Thursday	10:00 AM - 8:00 PM
	Friday	CLOSED
(Closed Saturday's July thru Labor Day)	Saturday	10:00 AM - 2:00 PM
School Superintendent	Monday thru Friday	8:00 AM - 4:00 PM
Selectmen's Office/Lic.Auth./Sewer Comm.	Monday, Wednesday & Thursday	8:00 AM - 4:00 PM
	Tuesday	8:00 AM - 6:30 PM
	Friday	CLOSED
Town Clerk, Treas., Tax Coll.	Monday, Wednesday & Thursday	8:00 AM - 4:00 PM
	Tuesday	8:00 AM - 6:30 PM
	Friday	CLOSED
Zoning Board of Appeals	Monday thru Thursday	8:00 AM - 3:30 PM

MEETINGS

Annual Town Election	3rd Saturday in May	7:00 AM	Elementary School
Annual Town Meeting	1st Saturday in May	9:00 AM	High School
Assessors	1st Tuesday	6:30 PM	Town Hall
Cemetery Commission	2nd Wednesday *(except July/Aug)*	8:30 AM	Cemetery Office
Computer Advisory Comm.	3rd Monday	7:00 PM	High School Library
Conservation Commission	1st & 3rd Wednesday	7:30 PM	Town Hall
Council On Aging	2nd Tuesday *(except July)*	2:00 PM	Eagle House
Finance Committee	2nd & 4th Thursday	7:00 PM	Town Hall
Board of Health	1st & 3rd Monday	7:00 PM	Town Hall
Housing Authority	3rd Tuesday	7:30 PM	131 White St.-Office
Housing Partnership	2nd Wednesday *(Mar/June/Sept/Dec)*	7:30 PM	Town Hall
Historical Commission	1st Monday *(except July/Aug)*	7:00 PM	Brooks House
Library Trustees	3rd Thursday *(except July/Aug)*	7:30 PM	Ritter Library
Personnel Board	1st Tuesday	6:00 PM	Eagle House
Planning Board	2nd & 4th Monday	7:00 PM	Brooks House
School Committee	1st Thursday 3rd Wednesday	7:00 PM 7:00 PM	Town Hall Brooks House
Selectmen	Tuesday	7:00 PM	Town Hall
Zoning Board of Appeals	2nd and 4th Wed. *(as needed)*	7:00 PM	Town Hall

ELECTED OFFICIALS

MODERATOR
2006 Richard J. Bishop

BOARD OF SELECTMEN
2004 Steven M. deBettencourt
2004 Daniel W. Cronin
2005 Joseph F. Bilotta ****
2005 Robert H. Bowen
2006 David W. Rodgers

BOARD OF HEALTH
2003 Raymond B. Tower (Selectmen Appointee)
2004 David M. Shea
2005 Donald A. Paradise
2005 Renny C. Bonner
2006 George L. Emond, Jr. ****

BOARD OF ASSESSORS
2004 Frederick J. Liatsis
2005 Paul Dickey ****
2006 Christopher M. Comeau

TOWN CLERK
2004 Kathryn M. Herrick

CONSTABLE
2004 John E. Baker

SCHOOL COMMITTEE
2004 Gregory D. Berthiaume
2004 Milree Keeling
2005 Seymour L. Schnuer
2005 David W. Reif ****
2006 Jennifer E. Benson

PARK COMMISSIONERS
2004 Clifford A. Worthley
2005 Brian Kane ****
2006 Jeffrey Johnson

CEMETERY COMMISSIONERS
2004 Charles P. Deming Sr.
2005 G. Barry Whitcomb ****
2006 Stanley W. Barney

COMMISSIONER OF TRUST FUNDS
2004 Richard S. Storrs ****
2005 Carl E.B. Sund
2006 Lynn F. Sallee

LIBRARY TRUSTEES
2004 Debra A. Chapdelaine ****
2004 Brian P. Laffond
2005 Diane E. Guenard
2005 Richard H. Letarte
2006 Linda Kennedy
2006 Maryann Sudolnik
2006 Gare Thompson

PLANNING BOARD
2004 Deborah Seeley
2005 Emerick R. Bakaysa
2006 Jerome L. Benson
2006 James A. Halloran
2007 Marion M. Benson ****

HOUSING AUTHORITY
2004 Barbara L. Schnuer ****
2005 Timothy W. Murphy
2006 John Romano
2006 James C. McKenna

APPOINTED BY THE GOVERNOR:
Bernard J. Paton

****Denotes Chairperson*

FY'03 APPOINTMENT LIST

ANIMAL CONTROL OFFICER-1 YR
2003 Kathleen M. Comeau

BOARD OF APPEALS-5 YRS
2003 Samuel J. Costa
2006 Alfred Gravelle
2006 John S. Czarnecki,
2007 Donald F. Bowen****
2007 Damien N. Riddle
Board of Appeals (Assoc. Member-3 yrs)
2003 Raymond E. Beal
2004 James Besarkarski
2004 Vacancy
2001 Vacancy

BUILDING INSPECTOR(3 yrs)
2005 Michael J. Sauvageau c/o Town Hall
Alternate Bldg. Insp. (1 yr) appointed by Bldg. Insp.
Harry Cullinan

CABLE ADVISORY COMMITTEE-1 YR
2003 Edward P. Dextraze
2003 Lance D. May
2003 Chad Adams
2003 Derek Dufresne
2001 Vacancy

CAPITAL PLANNING-3 YRS.
2003 Elaine Murphy-*Fin Com Rep*
2003 Seymour Schnuer -*School Rep.*
2004 Marion Benson, *Planning Board Rep.*
2004 Ernest Hunter -*Citizen at Large Rep.*
2005 Steven deBettencourt-*Bos Rep*

CHIEF ADMINISTRATIVE ASSISTANT (3yrs)
2005 Laura Williams, C/O Board of Selectmen

CIVIL DEFENSE DIRECTOR-1YR
2003 Brian L. LeBlanc
"Races " CONTROL OPERATOR-1 YR
2003 Dana Fraser
2003 Ralph Swick
MEMBERS
2003 Ian G. Martin
2003 Jeaninie E. Swick,
2003 David J. Boisvert
2003 Patrick Faucher, Jr.
2003 Barry Fox

COMPUTER ADVISORY COMMITTEE-1 YR
2003 Donald F. Bowen
2003 Allan Sousa
2003 Laura Williams
2003 Kathryn Herrick
2003 George Aho
2003 Joshua M. Romano
2003 Russell N. Harvey
2003 Gregory H. Kerins
2003 ***Scott Dillon/Alternate***

CONSERVATION COMMISSION-3 YRS
2003 John V. Byrne
2003 Jean Joseph Cote
2003 John F. Lattanzi
2004 Robert Verge
2004 Scott J. Perry ****
2005 Richard Bursch
2005 Joy Durner

CONSTABLE-1 YR
2003 Richard O. Allen
2003 Michael A. Bottalico
2003 Alfred R. Brassard
2003 Joseph R. Connell
2003 Rollin C. Lane
2003 Clark W. Paige
2003 Albert Poladian
2003 Paul B. Porter
2003 James E. Thebodeau
2003 Norman E. Winchester
2003 Leo P. Bergeron
2003 Bruce Greenhalgh

COUNCIL ON AGING-3 YRS
2003 Robert B. Bowen
2003 Jane G. Doyle
2004 Edith Gay
2005 Roland J. LeBlanc Jr.,.
2005 Judith K. Tarbell
2005 Theresa Longsjo ****

DAM KEEPER-1 YR
2003 Marty Lawlor

DIRECTOR, MGLA CHAPTER 128- (4-H) 1 YR
2003 Ruth L. Anderson

DIRECTOR OF PUBLIC WORKS -3 yrs.
2003 John M. Rodriquenz, c/o Hwy. Dept.

FENCE VIEWERS-1YR
2003 Stanley W. Barney
2003 John E. Baker

FIELD DRIVER-1 YR
2003 Kathleen M. Comeau

FINANCE COMMITTEE-3 YR
2003 Richard B. Howard
2003 Katherine Quenneville
2003 John Male
2004 Barbara Reynolds
2005 Winifred Elaine Murphy
2005 Joseph L. Pimentel
2005 *VACANCY*

FIRE CHIEF & LICENSING AUTHORITY AGENT
2003 Scott F. Glenny *(under contract)*

FOREST WARDEN-1 YR
2003 Scott F. Glenny

HAZARDOUS WASTE COORDINATOR-1 yr.
2003 *Vacancy*

HISTORICAL COMMISSION-3 YRS
2003 Nancy L. Bigelow
2003 Richard McGrath
2004 G. Barry Whitcomb
2005 Betty Burnap
2005 Christine Foltz
2004 ***Vacancy***

HOUSING PARTNERSHIP-3 YRS
2003 Barbara L. Schnuer ****
2003 Brian L. Laffond
2004 James C. McKenna

INSPECTOR OF ANIMALS-1 YR
2003 Kathleen M. Comeau
2003 Dr. Robert J. Fallon

INSPECTOR OF PLUMBING & GAS FITTINGS
appointed by the Building Inspector
Gary R. Williams
Assistant Inspector of Plumbing & Gas Fittings
Richard Kapenas

FY'03 APPOINTMENT LIST CONT'D.

INSPECTOR OF WEIGHTS & MEASURES-1 YR
2003 Joseph Quinn

INSPECTOR OF WIRES-1 YR.
2003 James Sharkey
Assistant Inspector of Wires-1 yr.
2003 John Biery

INSURANCE ADVISORY COMMITTEE-1 YR. MGL Chap.32B
2003 Dr. Richard Carlson, c/o Brooks House, Sch. Admin Rep
2003 Roger St. Jean-*Union Rep*
2003 Richard Lambert- *Police Rep.*
2003 Jean Hobbs *Retiree Rep.*
2003 Pam Smith, c/o Town Hall, *Town's Admin. Rep.*
2003 Susan Tallman, c/o Library, *Library's Rep.*
2003 Jack Rodriquenz, c/o Highway Dept. *Highway's Rep.*

LEAP (Lun. Educational Access Programming)
2003 Edward Dextraze
2003 Lance May
2003 Chad Adams
2003 Peter L. Duynstee
2003 Michael Sauvageau
2003 Peter Lincoln
2003 Richard Kullman

LUNENBURG CULTURAL COUNCIL
3 Year Term-2 Term Limit/12/31
2001 Jeanette Biery (2nd term)
2002 Marla Hirsch (1st term)
2001 Linda Kennedy (1st term)
2002 Kathleen Lemoine (2nd term)
2001 Peter McCarron (1st term)
2002 Sharon Vincent (1st term)
2003 Jean Hobbs (1st term)
2003 Christine Foltz. (1st term)
2003 Robert Conroy (1st term)

MONT. REGIONAL PLANNING COMM. (Alternate)
2003 Lance D. May

MONTY TECH REPRESENTATIVE (3 yrs)
2004 Chales F. Valera

MOTH SUPERINTENDENT
2001 Vacancy

PERSONNEL COMMITTEE-3 yrs (w/moderator)
2003 Linda Carrier ****
2003 Kathleen Hyatt
2004 Deborah Christen
2005 Marilyn Jewell
2000 Vacancy

POLICE CHIEF & LIC. AUTHORITY AGENTS
2003 Daniel Bourgeois, c/o Police Dept. (per contract)

POLICE SERGEANTS & LIC. AUTHORITY AGENTS
2003 Lt. Richard L. Lambert, c/o Police Dept.
2003 Sgt. Steven G. Whitney, "
2003 Sgt. Stanley Barney "
2003 Det. Sgt. James P. Marino, "

POLICE PATROLMEN & LIC. AUTHORITY AGENTS
(c/o Police Dept., 7 School St.)
2003 George E. Aho
2003 Charles P. Deming
2003 Sean J. Connery
2003 Jason Poitras
2003 Ernest E. Gould, III
2003 Thomas L. Gammel
2003 Janice M. Rickert
2003 Patrick Barney

RESERVE POLICE OFFICERS
2003 Robert J. Ayles
2003 Alphonse Baron
2003 Michael A. Bottalico
2003 Linda C. Carrier
2002 Robert J. Gould
2003 Paul G. Grunditz
2003 Ronald W. Knoll
2003 Donald Letarte
2003 Frank Contuzzi
2003 James M. Cooney
2003 James Curry
2003 Robert DiConza
2003 William M. Finlay
2003 Erin Fowler
2003 Walter C. Godfrey
2003 William H. Morrison
2003 Paul B. Porter
2003 Vincent Ruziak, Jr
2003 Russell St. Pierre
2003 Edward Walkonen
2003 Norman Winchester

POUND KEEPER-1 yr.
2003 George Larkin

PUBLIC SAFETY BUILDING COMMITTEE
term not to exceed 30 days after completion of project
Art. XVII -town by-law
Joseph F. Bilotta, /BOS Rep.
Chief Daniel Bourgeois/Police Dept. Rep.
Chief Scott Glenny/Fire Dept. Rep.
Marion Benson/Planning Board Rep.
Aime Denault/Citizen-at-large
Patrick Slattery/Citizen-at-large
David Pajari/Citizen-at-large

PUBLIC WEIGHERS FY'2003
James Donohue
Richard Reynolds
Al Vale
Eric Lundberg
Robert Mellen, Jr.
James Bjork
Ethan Liberty
Edward Silva

REGISTRAR OF VOTERS-3 YRS
2003 Edward R. Harriman
2004 Sophia Mortis
2005 Karen A. Kemp.
***** Kathryn Herrick, Town Clerk

SENIOR CITIZEN PROPERTY TAX WORK-OFF PROGRAM & TAXATION AID COMMITTEE
2003 Kathryn Herrick
2003 Jeanne DeBruin
2003 Paul Dickey
2003 Dorothy Musgrove
2003 Robert B. Bowen

SURVEYOR & MEASURER OF LUMBER
2003 Alan Paton

TECHNICAL ADVISORY COMMITTEE
2003 Marion Benson
2003 Jack Rodriquenz

TOWN ACCOUNTANT-5 yrs.
2004 Karen M. Brochu

TOWN HALL CLOCK WINDERS
Primary
2003 David Murphy
2003 Lou Franco
2003 Jay Schwartz
2003 Tom Alonzo
2003 Christine Foltz
Backup
2003 Al Dettenrieder.
2003 Howard Hargreaves
2003 Brian L. LeBlanc
2003 Seth Letarte
2003 A. Dexter White

TOWN CLERK, ASSISTANT-1 YR.
2003 Louise Paquette

TOWN COUNSEL
2003 Kopelman & Paige, Boston, MA

TOWN FOREST COMMITTEE- 3 YRS
2004 Richard Bursch
2001 Vacancy

2003 *Vacancy*

TREASURER & TAX COLLECTOR
Kathryn Herrick

TREASURER, ASSISTANT
2003 Lisa Wanamaker

TREE WARDEN
2003 Jack Rodriquenz, c/o Hwy. Dept.

VETERANS' SERVICE OFFICER
2003 John S. Czarnecki

WELLNESS COORDINATOR
2003 Jack Rodriquenz, c/o Hwy. Dept

275TH ANNIVERSARY COMMITTEE-1 YR.
2003 William Proctor Sr
2003 Mary E. Bingham
2003 Jean Hobbs****
2003 Ray G. MacCracken
2003 Charles P. Deming Sr
2003 Helen K. Brockelman
2003 Peter B. Lincoln
2003 Atty. Robert H. Bowen
2003 Edward Dextraze
2003 Kathleen Comeau
2003 Donald F. Gillis

****

AD HOC COMMITTEE

FINANCIAL ANALYSIS COMMITTEE-1 yr.
Kathryn Herrick
Harald Scheid
Karen Brochu
Mary L. Padula ****
Bernard J. Paton
Marion Benson
Joseph F. Bilotta, BOS Representative
Vacancy, At-Large-Representative
David Reif, School Committee Representative

****

****Denotes Chairperson***

file: c:/my documents/appointments/list'2002.DOC

BOARD OF SELECTMEN / SEWER COMMISSIONERS

The Board of Selectmen / Sewer Commissioners wish to regretfully acknowledge the passing of Selectman Ronald Lamothe who lost his fight to cancer during his second term in office. We will long remember the diligent campaign that he waged for his position as Selectman and the numerous hours he spent waving to passerby's from the town common. We cannot fail to mention his service to the youth of Lunenburg both as a teacher and coach who spent countless hours in nurturing the independent minds and bodies of our next generation. Ron was instrumental in the Town Hall suggestion box and brought forward the concerns of the citizens every week. He will be deeply missed by this Board and the Community.

The search for CAFO continued and culminated with the hiring of David DeManche from Uxbridge. Unfortunately, Mr. DeManche tenure was not very extensive with his resignation just three months after filing the position. This resulted in the Town resuming its search to fill the vacancy in accordance with the Town Charter. During this process Laura Williams was appointed Interim CAFO and worked mutually with Town Accountant Karen Brochu in fulfilling the additional responsibilities of this position.

The Phase 1, Contract II and Electric Avenue sewer installation projects continued throughout the year and are not expected to be completed until the end of 2004. This has caused quite a navigational challenge to residents and business owners and the Board has been sympathetic to the Towns plight and will continue to work with the Contractors and property owners to accomplish the completion of these main lines and spurs with the least impact as possible.

Representatives from the Board are also serving on the Building Committees for the Primary School, Public Safety Facility and the Library. Construction commenced on both the Primary School and the Public Safety Facility and completion is expected sometime next year for these two buildings and as of this writing; the Library is just beginning the design phase.

The Board extends a special "thank you" again this year to the Lunenburg / Townsend Rotary Club for decorating the Gazebo at Christmas and the Turkey Hill Gardeners for the seasonal Town Hall decorations and flowers in the upper common. We would also acknowledge the generous donations that were received and utilized so that the Town could continue with the traditional Band Concerts on the Common and any donations to this cause would be greatly appreciated.

Your Board has enjoyed working in service to the Town, working with each other and with you the citizens. The Selectmen would also like to acknowledge all of the individuals who work so hard for the Town and those who volunteer their time and commitment by serving on the various Boards, Commissions and Committees within the Town.

Please feel free to direct any questions to our office staff Laura Williams or Linda Douglas @978-582-4144. If they cannot assist you, they will forward your call to the appropriate authorities. Our office hours are Monday, Wednesday and Thursday 8:00 AM to 4:00 PM, Tuesday 8:00 AM to 6:30 PM and Friday closed.

Joseph F. Bilotta, Chairman
Steven M. deBettencourt, Vice-chairman
Robert H. Bowen, Clerk
David W. Rodgers, Member
Daniel W. Cronin, Member

Laura Williams, Interim CAFO
Linda Douglas, Administrative Assistant

CEMETERY DEPARTMENT

The Cemetery Commissioners and the Superintendent, Greg Bingham, meet regularly though out the year to discuss Cemetery business. The Commissioners would like to thank the McCarron family for the trees they have planted in the South Cemetery in memory of their son Myles. They also would like to thank David Berthiaume for his work on planting the flowers around the signs, as they enhance the beauty of the Cemeteries. Work is continuing on the new areas. The following is a list of persons who were buried this year.

NAME	CEMETERY	AGE
JANUARY		
Ronald R. Lamothe	N	61
Hilma C. Rose	N	85
Robert A. Garneau *WWII*	N	84
FEBRUARY		
Kathleen Deming	N	95
Joan G. Szocik	N	69
Gladys M. Goodale	S	95
MARCH		
Constance D. Ward	N	78
John Quigley Sr.	N	71
APRIL		
*Michiko Lassell	N	67
Annette J. Caulfield	N	70
*Evelyn B. Clarke	N	85
Rose M. Perry	S	87
MAY		
Willehard O. Oksanen *WWII*	N	81
James D. Bilek *WWII Korea*	S	72
*Marjorie E. Lucier	N	73
John Previte *WWII*	N	79
George R. Simpson	N	95
William E. Perkins *WWII*	N	80
*Viola L. Foster	N	97
Edith Gowell	N	90
*Svea Lehtonen	N	91
JUNE		
Jeannette M. McNally *Korea*	S	73
Elena Catarau	N	44
*Marion I. Cox	N	80
Albert C. Kolb *WWII*	N	81
*Stuart D. Dodge	N	56
*Walter E. Lusco	N	80
Joan M. Deming	N	71
JULY		
*Earle Brown *WWII*	N	75
Anna M. Dahlgren	N	90
Charles F. French *WWII*	N	75
*Marjorie Faulkner	N	89
*Richard F. Mulligan *Korea*	N	74
AUGUST		
George Starr *WWII*	N	89
Mary Farrell	S	73
Almon O. Ruggles *WWII*	S	79
*Alfred F. Goguen	N	79
*Collen K. Rabbitt	N	20 mo
*Carolyn E. Bernardi	N	49
*Elizabeth T. Brown	N	81
SEPTEMBER		
Stacy E. Bradley	S	37
*Ronald A. Blanchin	S	44
*John U Salo *WWII Korea*	N	79
Nancy L. Dionne	S	71
OCTOBER		
*Kim Ida Poikonen Jarvi	N	54
NOVEMBER		
Ulric H. Morin *WWII*	N	89
Florence Cleveland	N	100
Robert McNally *Korea*	S	73
DECEMBER		
*Bruce F. Stone	N	45
Bernice N. Pierce	S	99

*Denotes cremation

BUILDING INSPECTOR/ZONING OFFICIAL

It has been an extremely busy year in the Building Department. The office issued 390 building permits in 2003. Sixty-one permits were for new homes, the remaining 329 permits were for additions, swimming pools, sheds, decks and other general maintenance permits.

The new Public Safety Building is underway, as well as a new Primary School and the Chester Mossman Teen Center, it is an exciting year for Lunenburg.

Zoning Enforcement is ongoing. Zoning complaints must be submitted in writing to receive prompt attention.

The Building Department recommends that street numbers be posted on the home and on mailboxes using 4-inch Arabic numerals. This is helpful in an emergency situation and for locating homes for inspection purposes. We also recommend that smoke detector batteries be changed every six months.

Residents should be aware that Massachusetts Law requires that all persons, partnerships and corporations who bid or perform residential contracting (reconstruction, alterations, additions, etc.) for work exceeding $1000.00 be registered with the Commonwealth of Massachusetts. This office will enforce this provision, however, you should ask your contractor about his/her insurance and registration.

The Building Department is located on the second floor of the Town Hall. Office hours for the Building Department are Mondays 7:00-3:30, Tuesday 8:00-6:30, Wednesday 8:00-3:30, Thursday 7:00-3:30 and closed Friday. Michael J. Sauvageau is the Building Inspector/Zoning Official and Lisa Normandin serves as the Administrative Assistant to the Building Department.

CAPITAL PLANNING

Criteria: Mandates, Safety, Need, Crisis, Cost Effectiveness and Ability to Fund

The Capital Planning Committee has been working on the FY Plan based again on the above criteria. This year, the CPC has been working with the Finance Committee to better assess the Capital Budget vs. the Operating Budget for the Town. This procedure does two things; one, it gives the citizens of the community a truer picture of the cost of operating all departments, and secondly it allocates funding in the Capital Budget especially for the items listed. This means that only that item can be purchased and the funding cannot be switched from line item to line item. This ensures that the needs in capital arena are fulfilled. For example, if a line item in the Capital Budget reads $15,000.00 for school furniture, it can only be spent in that amount for school furniture. It has been rewarding for the Committee to experience cooperation from the Committees in this venture.

The FY04 Plan was for the amount of $193,589.00. The Jaws of Life, Fire Hose, Cruiser, Radio System Technology Replacement, GIS Deed Analysis and School Department Truck have been processed. The monies for renovation to the Town office have not been encumbered.

The FY05 Plan the CPC is presenting includes replacement boilers and electrical system in Town buildings, improvements and replacement items in the schools (flooring, furniture and wash fountains), technology needs and replacements in both the Town administration and the schools. The Vehicle Rotation upgrade will be presented with the police cruiser and 4x4 vehicle, fire department pickup, catch basin cleaner, and ice/water rescue boat. (Present vehicles within those departments will be rotated down to departments with lesser use demands, if possible.) The Plan will also include the time payments on lease/purchase for the ambulance and the Town Hall main copier. As of this writing, the Plan is still in draft form and the CPC has been working with the Finance Department toward a bottom line for expenditures.

The FY Plans have suffered cutbacks due to the financial crisis. The Committee now is striving to play catch-up a little at a time. The Committee is aware that the financial picture is still not rosy; however they are also aware that upkeep and upgrades are important in the Town buildings, vehicle needs and administrative technology. Not keeping abreast of these needs creates inefficiency, presents a safety factor and is not cost effective.

The last criterion "Ability to Fund" is still like looking into a black hole. As noted, the Capital FY Plans in FY02, 03 and 04 have taken severe hits. We were not, as a community, big spenders in FY02. We were beginning, in that year, to bring the needs into focus as defined in the five-year plans. We have not been to meet the five-year projections in recent years. We certainly have not been able to maintain building improvements. Just consider the boiler replacement (some over 50 years) we have had to face.

The vehicle rotation, replacement of outdated and worn out systems, standard of safety equipment and tools to administrate effectively have been affected. Since it is not realistic to foresee major renovations or major purchases, we need to chip away at present building needs and consider reuse that will be economical. Further, we need to assess all requests from departments with the view of frugality and at the same time sustain quality.

This writer would be inconsistent if the "Big Man" vs. "Little Man" analogy is not again put before you.

The Capital Program is being addressed aggressively. Visual progress is evident in the Primary School and the Public Safety Building projects. The Library is underway in planning. The Sewer projects are in stages of construction. This part of the Capital Program has been a long time in coming to fruition, but it also carries financial burden.

In view of the above, and the financial situation, the CPC Committee is taking the tactic of biting off bits to keep up the standards with the FY Plans.

Marion M. Benson, Planning Board (Chair)
Steven deBettencourt, Board of Selectmen
Ernest Hunter, Citizen at Large
Elaine Murphy, Finance Committee
Seymour Schnuer, School Committee

CENTRAL MASS MOSQUITO CONTROL

The Central Massachusetts Mosquito Control Project (the Project) currently provides its services to 36 cities and towns throughout Middlesex and Worcester Counties. The Project's headquarters is located at 111 Otis Street, Northboro MA. Tours of the Headquarter or visits to field work sites may be arranged by calling the office in advance. Please call (508) 393-3055 during business hours for more information. The Project practices Integrated Mosquito Management (IMM), blending state of the art methods and techniques with expertise, experience, and scientific research to provide our member communities with environmentally sound and cost effective mosquito control.

During 2003 the Project received 5,331 requests for service from town residents and officials. We scheduled five hundred and ninety (590) adult mosquito operations in residential areas, and four hundred and seventy six (476) larviciding operations. A total of over 4,000 pounds of Bti (Bacillus thuringiensis israelensis) was applied by helicopter to 2 towns, Chelmsford & Billerica, and 6,204 pounds by hand throughout our service area to area wetlands to reduce the emergence of adult mosquitoes. This represents over 2,040 acres of wetland that was treated with this mosquito-specific bacteria, significantly reducing adult mosquito populations in these areas. Twenty-eight thousand, nine hundred and fifty (28,950) catch basins were treated with larvicidal briquettes to control the mosquitoes that seek out these cool dark wet areas to breed, including the *Culex* mosquito, a major target for West Nile Virus transmission. Four thousand, eight hundred and ninety five (4,895) culverts were cleaned in an attempt to eliminate unnecessary standing water and reduce mosquito breeding. This work was done in conjunction with cleaning, clearing and digging of eighty five thousand, nine hundred and forty eight (85,498) feet of streams, brooks and ditches. This represents almost sixteen and one-half miles of waterways which were cleaned and improved by Project personnel in 2003.

The Mosquito Awareness Program which we offer to elementary schools and other civic organizations in our district has become very popular. Project staff meets with students, teachers or concerned residents to discuss mosquito biology, mosquito habitat, and control procedures. Much of the presentation is directed towards what children and their families can do to prevent mosquitoes from breeding around their homes. Slides, videos, coloring books and other handouts make this an interesting program. This program is tailored to meet the needs of the specific audience. Eight hundred and twelve (812) students attended these programs.

As part of our effort to reduce the need for pesticides we continue to expand our wetlands restoration program. By cleaning clogged and overgrown waterways, mosquito breeding can be reduced and drainage areas are restored to historic conditions.

Bti mosquito larvicide is used to treat areas where mosquito larvae are found. We routinely check known breeding sites kept in our database, but also encourage the public to notify us of any areas they suspect could breed mosquitoes. Our field crews will investigate all such requests and treat the area only if surveillance gathered at the time shows an imminent threat of mosquito emergence.

Our goal is to handle all mosquito problems with education, wetlands restoration or larviciding, but we recognize that there are times when adult mosquito spraying is the only viable solution. In such cases specific areas are treated with either hand-held or pickup truck mounted sprayers if surveillance gathered at the time shows sufficient numbers of adult mosquitoes present to

warrant an application. This allows residents and town officials to exclude areas under their control from this, or any part of our program.

The Project's surveillance program monitors adult mosquito and larval population density, and is the backbone for prescribing various control techniques. Specialized mosquito traps are deployed throughout the Project's service area to sample for mosquitoes that may be transmitting mosquito-borne diseases. In conjunction with the Mass Department of Public Health we sample in areas suspected of harboring WNV and other viruses.

Educational pamphlets are available to anyone interested in learning about mosquito control and the services provided by the Project, and these items are routinely stocked in member Town/City Halls and libraries. We also have a website www.cmmcp.org that has extensive information on our procedures. This website has become a model for other Mosquito Projects, and has been widely used throughout our service area and beyond.

We would like to thank you for your support during 2003 and we look forward to helping you and your community with its mosquito problems in 2004 and beyond.

CONSERVATION COMMISSION

The Lunenburg Conservation Commission has seven members appointed by the selectmen who are charged with administering the Massachusetts Wetlands Protection Act and the Lunenburg Wetlands Protection Bylaw. They are also responsible for management and acquisition of conservation lands and assisting the public with wetland and ecological issues and concerns.

The Commission held a dedication ceremony at the Hunting Hill Conservation Land in May. A memorial stone for Thomas Lawson, a committed member of the Commission who passed away in 1996, was erected at the entrance. The land was purchased in 1998 with a Self-Help Grant awarded by the DEM. The Commission continues to work with the Division of Fisheries & Wildlife and the Shirley Conservation Commission on a land management plan that will include a trail connecting the parcels of land.

Town projects continue to have an impact on the activity in the department. The sewer project, the public safety building, and the primary school have all required continued review. Lake Shirley is in the second year of implementing the Lake Management Plan approved last year.

Associate Member, Roger Gilchrest has been working closely with the Eagle Scouts. Last year, Daniel Osgood planned to construct and install signage at the Gus Russell Conservation Land but the project had zoning and access problems. The Gus Russell lot is located on Lancaster Avenue. Daniel worked to resolve these issues and has completed his project. Stairs were installed using railroad ties and gravel. A path was cleared to the top of the hill. The Commission appreciates all his efforts and hard work. It is a pleasure to work with such dedicated youth.

There were 35 Notice of Intent hearings, 15 Requests for Determination of Applicability and one request for Resource Delineation. There were 10 violations that required enforcement action. Two Denials were issued and resulted in Requests for Superceding Orders from the DEP. Both were denied. One of these DEP denials prompted DEP enforcement due to violations cited during the site visit for the Superceding Order.

Current Commission Members are: Chairman Scott Perry, Vice Chairman Rob Verge, Members – Richard Bursch, Jack Byrne, JJ Cote, Joy Derner and John Lattanzi, Associate Member Roger Gilchrest. Matt Marro is the Conservation Agent and Joyce Hachey is the Commission's Administrative Assistant.

COUNCIL ON AGING

The Council on Aging is a municipally appointed volunteer board authorized under Massachusetts General Law, Chapter 40, Section 8B. The Council's mission is to advocate for improved quality of life for all seniors through supportive services, programs and education. The Council's major responsibilities include setting of local policy for the administration of elder programs and services, developing, coordinating and/or conducting such activities, advocating for elders and educating the community-at-large about the needs and resources affecting their lives.

The Eagle House Senior Center is a gathering place for persons sixty years of age or older. The center provides programs, both at the center and in elder's homes, which encourage elders to maintain healthy lifestyles. Our senior population have raised their families and lived their lives in this community. By providing resources to help them remain in this community we add to our

towns diversity and development. In addition to center activities, fitness/ health programs, and educational opportunities we promote volunteerism and intergenerational collaboration. Outside the realm of the center activities, we provide information and referral services, a home delivered meal program, transportation, outreach home visits, and "elder at risk" reporting to proper agencies.

In FY'03 Outreach serviced 563 individuals with 2047 units of assistance. The Outreach worker establishes in-home visits and is responsible for intakes and referrals. The Friendly Visitor Program and the "Are You Okay?" program provide companionship and calls to elders living alone. If you need a home visit, please call our Outreach worker at the senior center.

Trained and certified SHINE (Serving Health Information Needs of Elders) Counselors provide free assistance to elders with health insurance inquiries, food stamps, or social security and pension questions and all health related insurance programs. It is predicted that persons 60 years of age or older will soon represent 50 % or more of this country's population. The Baby Boomers will arrive in less than two years significantly increasing the elder population. With this will come the need for more services, especially those areas concerning health issues.

The first annual Pancake Breakfast was held in conjunction with the American Legion Post 283 Memorial Day service. It was a great success with many persons coming to honor our veterans. Our monthly newsletter provides up to date information for elders. Monthly health screenings and other clinics such as flu immunization are conducted through Nashoba Nursing and Hospice. Nutritious meals are served daily both at the center and delivered by volunteers to elder's homes under the Meals on Wheels Program. Fitness classes such as, line dancing, senior aerobics, chair aerobics, and a walking club are offered. Other educational and social programs are presented throughout the year, many sponsored by the Friends of the Eagle House Incorporated.

A handicap accessible van is available Monday through Friday to residents 60 years or older providing transportation to shopping, medical appointments, part time jobs, visits to nursing homes and of course to all activities at the Eagle House. Non-elder residents can apply if they are "transportation disabled". The Council on Aging also arranges medical transports to Boston and Worcester facilities.

The senior center is a focal point in the community for the coordination of all elder services. We work in conjunction with Central Mass Agency on Aging, Montachusett Home Care Corporation, Montachusett Opportunity Council, Montachusett Area Regional Transit Authority, Nashoba Nursing and Hospice Service, Mass Councils on Aging, and the Executive Office of Elder Affairs.

In our FY'03 annual report to the state Executive Office of Elder Affairs we provided 23,718 documented units of service to 1174 elders, of these 16507 units were for wellness and support services. In addition 1815 units of service were provided to non-elders. Our volunteers contributed 5194 hours of service to the Town of Lunenburg. Their dedication helps to maintain our operation with the cuts to our budget.

The Director chairs the Senior Citizen Property Tax Work-Off Committee established at the May 1999 Town Meeting which finds eligible senior citizens for job placements requested by town departments. Seniors who are eligible for this program can receive up to a $500 abatement on their property taxes.

The Council on Aging board members in FY'03 were Theresa Longsjo (chairperson), Roland LeBlanc (vice chair) Edith Carey, Robert Fickett, Edith Gay, Sheila Lumi, Barbara Raboin and Judith Tarbell. Robert Bowen and Jane Doyle left the board after many years of dedicated service. The Board lost A.Bud Ruggles who passed away in August 2003. Mr. Ruggles had been a long time Meals on Wheels driver and worked with an Eagle Scout to provide reprogrammed 911 cell phones to our elders. He will be greatly missed.

In FY'03 staff consisted of: Jeanne DeBruin, Director; Susan Doherty, Principal Clerk; Yvonne Wright, Outreach Worker; Ethel Mattson,
Meal Site Manager; Gerald Beloin and Donald Paradise Van Drivers; Virginia Blair Elder Service Corps worker and George Pugsley, Custodian. The Eagle house is open Monday-Friday 8:00-4:00 PM for assistance or to volunteer please call (978) 582-4166. *Our e-mail address: Eaglehouse 25 @aol.com*

DEPARTMENT OF PUBLIC WORKS

The Department of Public Works is a consolidation of the Highway, Cemetery, Parks, Sewer, and Facilities departments working in concert, combining equipment and personnel in order to provide a wide range of services to the community. The following is a breakdown of allocations and expenditures for fiscal 2003:

General Highway Maintenance
The cost of materials and tools used in the repair and rehabilitation of roadways, drainage, street sweeping, and mowing of the right of way: an allocation of $ 73,432.00 was totally expended.
Labor
Wages for highway division workers and clerical staff combined totaled $321,513.96. An added amount of $1,026.00 was transferred to the cemetery account to cover overtime for Saturday burials.
Traffic Signs and Devices
Utility charges for the operation of street signals at Whalom Rd. and Rt. 13 and caution signs for school zones are funded through this item. Also covered through this account is the annual expense of street line painting, stop bars, crosswalks, and parking spaces. Standardized street and warning signs are also purchased through this account. An allocation of $5,000.00 was totally expended.
Tree Removal
The Director of Public Works, as Tree Warden oversees the felling, trimming, and disposal of any trees within the Town right of way. Due to the size and location of some trees a professional tree service is subcontracted. Public Work's personnel work with the contractor in order to defray a portion of the cost. The entire $ 7,000.00 appropriation was expended.
Snow Removal
The most important public safety function we provide during the winter months is that of keeping the roadways clear of ice and snow. Road salt is purchased through a cooperative with fourteen communities in order to insure the lowest possible price per ton. Sand, mixed with the salt to treat roadways is screened in an area adjacent to the capped landfill by highway workers and then trucked to the town yard. During a winter emergency the public works department and hired contractors combine over twenty pieces of storm fighting equipment to maintain safe travel over the 100 miles of roadways, sidewalks, and parking lots. As is often the case this account operated in a deficit. $239,000.00 was expended. The yearly allocation is $135,000.00.
Town Barn Maintenance
This account covers the cost of maintaining the public works facility located at 520 Chase Rd. Expenses include utility costs, janitorial supplies, office equipment and general building repairs. The fueling station for all town vehicles is located at this address and in part is maintained through this account. An amount of $ 5,300.00 was funded and expended.
Vehicle Maintenance
This division of the public works dept. is responsible for the fueling, servicing, maintenance, and repair of every town vehicle. Police cruisers, fire apparatus, school, park and cemetery equipment, and over twenty highway machines ranging from small trucks to large earth movers are serviced through this program. The tasks confronting this division become increasingly more complex each year as state of the art safety vehicles are added and older highway vehicles must be kept to strict safety standards. The entire budgeted amount, $ 81,344.00 was expended with a significant portion of the public works allocation transferred to cover overages of police, fire, and school departments.
Sewer Construction
Contract II of Phase I sewer installation in the amount of $6.1 million dollars was awarded to M.D.R. Const. Co. of Tewksbury. Excavation began in March. By the conclusion if FY 03 works was underway in the area of Prospect St. and Laurel Lane. The State Revolving Fund and residential betterments will supply the major sources of funding.

Ludlow Const. Co. of Ludlow, MA began installation of sewer lines and the complete rehabilitation of Rt. 13 from the Leominster line to RT. 2A. Financing of the sewer portion of the project is through a betterment process, whereas the road reconstruction is funded entirely from a Public Works Economic Development grant procured from the State Department of Transportation and Construction.

As we all know the Town is in the midst of major infrastructure improvements. The residents of Lunenburg should be commended for their continued patience, particularly those who reside, travel, and operate businesses along Electric Ave and in the Prospect St. and Laurel Lane neighborhoods as well. We will be tested as a community as it appears at times that there is construction on every corner. Please understand that these are capital projects and therefore not under the control of the Department of Public Works. It is imperative that everyone involved work together in the spirit of cooperation in order to give ourselves the greatest opportunity for success.

BOARD OF HEALTH

George Emond, Chairman

As in the past few years, we are again being asked to cut costs. Our proposed 2005 budget of about $21,500 is roughly 97 percent salary, leaving little more than enough to buy a few supplies. Board members and our employee often pay expenses for supplies and town related activities out of their own pockets. The increasing trend of the State to shift their costs to cities and towns, has resulted in the Department of Environmental Protection transferring more and more of their responsibilities downward to the local level, as a result, our Board has faced increased demands for its very limited time.

Since our office hours are limited to 26 hours per week, spread across Monday, Tuesday and Wednesday. Board members, who are uncompensated for their efforts, find themselves increasingly called upon for information and assistance. Our one very dedicated employee works many unpaid hours both in the office and at home to keep the department functional.

Changes to 310CMR15 (Title V) that are proposed and soon to be offered for public comment, will transfer even more responsibility to local boards for interpretation, application, and enforcement of regulations that up to now were completely under the control of the Commonwealth. These increased responsibilities will place an even greater demand on Board members, who will need to become educated in the new and modified regulations and the fields which they cover so to be able to properly interpret and apply the new regulations.

We will do our best to process all your requests in a timely manner. However, we ask your patience when delays are encountered due to workload.

As with last year, the problem with rabid animals within the town was not a serious issue. Several birds tested positive for West Nile virus, but no human illnesses were reported.

As in previous years, Beaver control permits were issued. The discussion of this controversial law continues at both the State and local level. The Legislature has before it several measures that either modify or repeal the protected status of Beavers in order to regain control over these rodents whose population has exploded since trapping was outlawed. As of March 1st, no action has yet been taken.

Under the direction of our Agent, NABH, Well clinics for children, adults, elderly, as well as the dental program offered in our school system continue as always. Statistics are reported later in the Board of Health report.

If you have a problem or require information that you believe we may be able to provide, please contact our office at 978-582-4135 for assistance.

NASHOBA ASSOCIATED BOARDS OF HEALTH

Nashoba Associated Boards of Health continues to serve the local Board of Health in meeting the challenges of environmental and public health needs in Lunenburg. In 2003 particular efforts were made to respond to a series of new service demands in the Environmental Division while adjusting to changes in the Nursing Division created by national trends in health care. Some of the new service demands included:

- Answering inquiries from other local departments regarding suspected bioterrorism incidents. Through coordination with the Massachusetts Department of Public Health (MDPH), suspect samples were submitted to the DPH lab for analysis; follow-up, as appropriate, was taken when lab results were learned. Nashoba's internet web site provided information for the public. (See *nashoba.org)*
- Response to the bioterrorism threat through coordination and communication with the Centers for Disease Control, the MDPH, and the Massachusetts Emergency Management Agency and through coordination and communication with the Northern Middlesex Regional Emergency Planning Committee (LEPC) of which Lunenburg is a member.
- Response to the West Nile Encephalitis (WNV) surveillance effort through coordination with MDPH, through the collection of suspected bird samples, submittal to the MDPH lab, and follow-up when the lab results were obtained.
- Response to health related impacts of beavers through coordination with the local Board of Health in the issuance of the necessary permits.
- Response to state mandated changes in regulations requiring more frequent beach sampling through sample collection, submittal for analysis, and follow-up when results were obtained.

We look forward to continuing our work with Lunenburg's Board of Health. Included in the day-to-day work of Nashoba in 2003 were the following:

- Through membership in the Association Lunenburg benefited from the services of Nashoba staff including: Registered Sanitarians, Certified Health Officers, Registered Nurses, Nutritionists, Registered Physical & Occupational Therapists, Licensed Social Workers, Certified Home Health Aides, and Registered Dental Hygienists
- Nashoba Nursing Service is the regional vaccine depot for MDPH. As such it is a valuable resource for the regular distribution of vaccines to physicians in the area, provides regular public immunization clinics, and is positioned and equipped to provide for larger scale immunizations should MDPH require them.

- Provided health education programs in collaboration with the Lunenburg Council on Aging.
- Collaborated with Montachusett Home Care around elders at risk and other safety issues.
- Responded to and assessed mental health concerns through crisis intervention and teamwork with other community resources including the Lipton Center.
- Continued participation in pilot project for home health nursing staff to more effectively and efficiently maintain patient records through use of palm-held computers. Use daily downloaded data for scheduling, chart maintenance, and records access. Database refreshed daily by uploading at day's end.
- Reviewed 109 Title 5 state mandated private Septic System Inspections for Lunenburg Board of Health. Received, reviewed, and filed these state mandated (but unfunded) Title 5 inspections. Corresponded with inspectors regarding deficiencies; referred deficient inspections to Lunenburg Board of Health for enforcement action
- By the Lunenburg Board of Health's continued participation in the Association you can shape your future local public health programs and share in the benefits of quality service, under local control, at a reasonable cost!

ENVIRONMENTAL HEALTH DEPARTMENT – ENVIRONMENTAL INFORMATION RESPONSES

Lunenburg Office (days) 99

The Nashoba Sanitarian is generally scheduled to be available for the public twice a week on Monday and Wednesday mornings at the Lunenburg Board of Health Office. Other Meetings occur informally. This does not reflect the daily calls handled by the three Nashoba secretaries during daily business hours.

Food Service Licenses & Inspections 61

Nashoba annually mails out and receives application form both restaurants and retail food businesses. Licenses are renewed for existing facilities. Plans are submitted and reviewed prior to initial licensing. Most licensees are inspected at a minimum twice a year. Where deficiencies are found, a re-inspection is scheduled to insure compliance. When a complaint from the public is received an inspection is conducted. During this inspection health factors of food handlers is also investigated and where appropriate medical consultation and laboratory testing may be required.

Beach/Camp/School Inspections 29

Camps are inspected at least annually at opening for compliance with State Sanitary Code, Chapter IV, 105 CMR 430.00. Public swimming beaches are sampled for water quality every week during the summer and more often if a problem is suspected.

Housing & Nuisance Investigations 14

Nashoba, as agent for the local Board of Health, inspects dwellings for conformance with State Sanitary Code 105 CMR 410.00, issues orders for correction, and re-inspect for compliance. Similarly, complaints from residents concerning unsanitary conditions or pollution events are investigated.

Septic System Test Applications 77

Applications from residents proposing to build or upgrade a septic system are accepted, a file created, and testing dates are coordinated with the applicant's engineer.

Septic System Lot Tests 237

Nashoba sanitarian witnesses soil evaluations, deep hole tests, and, usually on a separate date, percolation tests conducted by the applicant's engineer which serve as the basis of the design of the septic system.

Septic System Plan Applications 83

Detailed plans created by engineers hired by residents proposing to build or upgrade a septic system are received, filed, and routed to the Nashoba sanitarian for review.

Septic System Plan Reviews 96

Engineered plans are reviewed according to state code, Title 5, and local Board of Health regulations and review forms are created and sent to engineer for revision. Subsequent re-submittals by the engineer are also reviewed.

Septic System Permit Applications (new lots) 54

Septic System Permit Applications (upgrades) 29

Applicants' approved plan submittals and Board of Health requirements are incorporated into a permit to construct the septic system.

Septic System Construction Inspections 166

Nashoba Sanitarian is called to construction site at various phases of construction to witness & verify that system is built according to plans.

Septic System Consultations 57

During all phases of application, design, and construction the Nashoba Sanitarian is called upon for legal details and interpretation.

Well Permits 35

Water Quality/Well Consultations 64

Private wells are regulated solely by local Board of Health regulations, The Nashoba Sanitarian assist the Board of Health by reviewing well plans, securing well water samples, and interpreting water quality test results.

Rabies Clinics – Animals Immunized 9

Nashoba Nursing Service

Nursing Visits 863

Nashoba's Certified Home Health Registered Nurses visit patients at home under their physician's orders to provide an assessment of physical, psychological, and nutritional needs. Skills include teaching/supervision of medications, wound care, ostomy care, IV therapy on a 24 hour basis, catheter care, case management and referral to other services as needed.

Hospice 92

Nashoba's Certified Home Hospice provides full range of terminal care services to patients who elect this program. In addition to nursing and therapy services, Hospice patients may benefit from nutrition, social work and spiritual bereavement care as well as volunteer services.

Rehabilitative Therapy Visits 516

Nashoba Therapists provide skilled physical, occupational, and speech therapeutic interventions through assessment, treatment and education. Their integration of client, caregiver, and medical outcomes aims at attaining maximum functional independence.

Medical Social Service Visits 47

Nashoba Social Workers provide short-term assistance to patients at home for counseling and referral to community resources.

Home Health Aide Visits 320

Nashoba's Certified Home Care Aides provide assistance with bathing, dressing, exercises and meal preparation.

Local Well Adult, Support Groups, & Other Clinic Visits 408

Included are 6 health promotion home visits. Also well adult clinics, and hepatitis, pneumovax, tetanus clinics. Flu immunization clinics served 152 persons. Other clinics included cholesterol, exercise, mental health and bereavement clinics.

Communicable Disease Reporting & Control

Nashoba's Nursing Service & Environmental Health Department work together to meet the local Board of Health's responsibilities under the law to do the following:

- *Investigate and control the spread of communicable diseases within Lunenburg (MGL Chap111, Sec 6, 7, and 92-116). Nashoba works with the Massachusetts Department of Public Health (MDPH) in this area.*
- *Receive and process reports from physicians concerning cases of diseases "dangerous to the public health" as defined by MDPH (MGL Chap111, Sec 6)*
- *Notify MDPH Division of Epidemiology and Immunization within 24 hours of receiving notice of any case "dangerous to the public health".*
- *Receive reports and undertake follow-up as necessary regarding certain food borne and waterborne diseases and diseases being monitored by the MDPH.*
- *Receives reports, investigates and conducts follow-up on all incidences involving positive rabies results.*

<u>Dental Health Department</u>

Examination, Cleaning & Fluoride – Grades K, 2 & 4

Nashoba' Registered Dental Hygienists, operating out of the school nurse's office and records provide these services to those children whose parents have given written consent.

Students Eligible	373
Students Participating	124
Referred to Dentist	13
Instruction – Grades K, 1 & 5	

Nashoba's Registered Dental Hygienists also provide classroom instruction of cleaning and maintaining healthy teeth to all children in these grades.

Number of Programs	12
Students Participating	384

HISTORICAL COMMISSION

The Lunenburg Historic Commission has six members (with one vacancy) appointed by the selectman who are charged with historic preservation of Lunenburg's resources. To accomplish this goal this commission has been busy this year with attending and submitting reports to the Planning Board around the Demolition Delay By-Law for historic properties that are over 75 years in age. The Demolition Delay By-Law was implemented by a 2/3 vote at the Town meeting in 2002. It was hoped to be a preservation tool by fostering public discussion and seeking alternative solutions to the demolition of a historic property. We are sad to report that we lost two properties before the law was properly implemented. We have continued our mission of identifying and cataloging historic sites with the North cemetery being prepared to join our historic inventory of Lunenburg. We are moving into the future with a new computer and inventory tool in Past Perfect software.

Members of the Historical Commission did individually share their talents by participating in the 275th Celebration of Lunenburg programs of "Under the Buttonwood Tree" pageant, the Parade, "Then and Now Fashion Show" and bell-ringing. The Historic Commission has purchased a sign to mark Luther Burbank's development of his famous russet potato at the Jones House site at 42 Main Street. Installation is not complete. Historical Commission meets the first Monday of the month at 7:00 PM at the Brooks House.

HOUSING AUTHORITY

The Lunenburg Housing Authority was founded in 1968 and is chartered to oversee, manage and develop State-aided housing within the Town. Within this charter, the Authority, in participation with other community leaders, also has responsibility to assure adequate sources of affordable private housing for Lunenburg. The Authority currently manages 48 subsidized apartments under Chapter 667, known as Pearl Brook Housing for the Elderly. Our family housing is adjacent to the Pearl Brook Apartments and consists of six townhouse style apartments consisting go two and three bedroom units.

Applications for State-aided housing may be obtained at 131 White Street, or by calling 978-345-7655 or 978-537-5300 (Leominster). To be eligible for elderly housing, applicants must be at least 60 years old at the time of application. All other applicants, including handicapped and disabled individuals must be of legal age to enter into a lease. The Authority will grant a preference for Lunenburg residents. Veterans that qualify will also receive a preference. Rent is based on your household's annual adjusted gross income. Elderly residents will pay 30% of their adjusted income, while residents of our family housing will pay 27% of their adjusted income and all utilities (excluding water and sewer).

In 2003, the Leominster Housing Authority continued their successful partnership with the Lunenburg Housing Authority, offering administrative services to both Lunenburg's family and elderly conventional housing. The Lunenburg Housing Authority believes that the management of contracting services with other agencies, in terms of quality management services, is a valuable tool for success. This cooperative effort has allowed the Lunenburg Housing Authority to offer greater services and assistance to our clients while maintaining our strong leadership and involvement in the community.

In the fall of 2003, the Board of Selectmen and the Planning Board were pleased to announce a housing opportunity graciously provided by Jack White, developer of the housing development named "White Woods". Mr. White offered two of the ten town houses in Phase II of this development as moderate-income unit available through a lottery. The Lunenburg Housing Authority was pleased to provide with technical assistance in the lottery thereby reaching a level of varied housing stock for all residents, present and future, in the Town of Lunenburg.

Currently, the Lunenburg Housing Authority is in the process of planning renovations to our elderly conventional complex. These renovations include refurbishing the community room; exterior porches and roofs are expected to be entertained in 2004.

The Authority has maintained its membership in the Massachusetts Chapter of the National Association of Housing and Redevelopment Officials (NAHRO). Participation in NAHRO helps assure that the Authority is up-to-date with programs and funding sources available for use within Lunenburg.

PLANNING BOARD

In 2003 and presently in 2004, the Planning Board has worked with the Development Plan Review Bylaw and Special Permits for the implementation of projects under the Lunenburg Zoning Bylaw and the Rules and Regulations Governing the Subdivision of Land as well as MGL, Chapter 40A and Chapter 41.

The noted projects are: The Village at Flat Hill, Gabes Place, Goodrich Woods, Harley House, Keyspan, LT&AFA, N. Middlesex Bank, Robbs Terrace, Shaker Court, Stone Farm, Twin City Baptist and White Woods. In addition are: the Town Building Projects, Primary School, Public Safety Building, and the Library.

There are several projects that have been put on hold including Old Castle. New projects coming aboard in the preliminary submittals are developments on Lunenburg Nominee Trust land, called Highfield Village and Whites Woods Phase 111. The Town has received a 40B application for 1229 Massachusetts Avenue. The Planning Board will submit their input to the ZBA.

The Planning Board conducts a Development Plan Review on all projects. The Board continues that review until closure of the project through monitoring and inspecting procedures.

The Board is working on Executive Order 418 which permits grant monies for planning of four elements: housing, economic development, transportation and open space-resource protection. In addition, the Board has created two ad hoc committees relative to Center Planning. The Data Collection Committee has viewed the major town buildings and has assembled all the data on those buildings. Lynn Sallee, Planning Board Member is the Chair. Members are: Christopher Comeau, Paul Dickey, Board of Assessors, Joseph Gerante, Public Works Department, Rebecca Lantry, Historical Commission and Steven Marsden and Patrick Slattery, Members at Large. The second committee, called the Need's Committee will ascertain the re-use of buildings according to the needs of Town Administration and different segments of the Community, such as the elderly. Deborah Seeley, Planning Board Member is the Chair. Members are: Michael Barney, School Department, Laura Williams, Town Administration, Barbara Reynolds, Finance Committee, Jean Hobbs, Elderly Affairs and Emerick Bakaysa and Lance May, Members at Large. Other Committees will be formed to address the issues as needed and all committees will come together to form a consensus to expand the Envision project.

Work has begun on an update of the Master Plan. This plan is considered by the Board as a revolving document. New legislation is pending regarding MGL, Chapter 40A, the Zoning Act, which will necessitate that the Master Plans of the Communities in Massachusetts be consistent with that Chapter. The Planning Board is keeping abreast of the proposed changes to Chapter 40A and is commenting to the State.

The Board has also initiated a quantifying study to evaluate the Phased Growth Bylaw, Section 4.11. This bylaw is in the twilight of its existence. The study will evaluate the necessity of continuing limiting the number of building permits per year. The study will involve reports from the Police, Fire, Highway Departments, as well as the School Department and the Finance Department. In addition, we will be requesting data through the different administrative sections of our Town Government including sewer plans, trash and recycling and new municipal building impacts. Citizen input will also be considered.

The Board, recognizing "Smart Growth" as the answer to a healthy community, is spending time in studying the benefits of process and procedures, which balance development and environmental protection and create business opportunity which will provide neighborhood services and amenities. The Board is looking to create strong neighborhoods, which provide a range of housing options. Smart Growth policies include: redeveloping first, concentrating development, restoring and enhancing the environment, conserving natural resources, expanding housing opportunities, providing transportation choices, fostering sustainable businesses and planning regionally. Not all the key points are meaningful for Lunenburg but the majority of Smart Growth policies will enhance the growth of the community while protecting its amenities.

The Board members continue to serve on other committees such as: Capital Planning, Building Committees for the Primary School, Public Safety and the Library, CAFO Search Committee, MRPC (Montachusett Regional Planning) and MART (Montachusett Area Regional Transit) Boards, as well as the ad hoc committees mentioned above.

The Board wishes Ms Louise Boyle well in her retirement. Louise has worked seventeen years for the Town of Lunenburg. The Board welcomes Ms Barbara McManus.

Marion M. Benson, Chair
James Halloran, Member
Deborah Seeley, Member
Jerome Benson, Member
Lynn Sallee, Member

RITTER MEMORIAL LIBRARY

On October 18th Lunenburg voters overwhelmingly supported bonding up to $1.8 million dollars for the town's share of a new library in Lunenburg and the State's Board of Library Commissioners gave us the first 30% of our $1,782,563 grant. The staff, Friends, and trustees of Ritter Library have worked tirelessly for many years on this project and are extremely grateful for this powerful statement about the importance of lifelong learning. Together we will build a wonderful new public library that will serve this community well for generations to come.

Items of Note:

- Library users were able to place holds on library materials from their home computers starting in January. The catalog and databases are still available 24:7 with your library card, but the added benefit of patron placed holds has been a great convenience to many of our users. Try it by visiting www.cwmars.org.
- Our website moved to www.lunenburg.com/ritter. Many thanks to Doug Pulsifer.
- We now email our newsletter to over 100 homes each month. Leave your email address at the desk or email stallman@cwmars.org if this service appeals to you.
- Ritter received a bequest from Ruth B Woodman in the amount of $18,896 to be kept in trust for books and special services
-

How You Used Your Library in 2003:

- You checked out 87,031 items
- We received 4454 interlibrary loan items for our users. Ritter lent out 2642 items to other libraries through interlibrary loan. We had a request from Seattle for a book Ritter owns, demonstrating how well connected all the libraries have become!
- We had 95 programs for Adults and/or Teens and 108 programs for Children including the Great Cardboard Boat Race, Big Truck Night, numerous ebay classes, and four different book clubs for young readers.

Friends Making a Difference:

- The Friends of the Ritter Memorial Library sponsored a Band Concert & Library Celebration in August, funded countless programs, provided all the copier/printer and colored paper we used for the year, provided 15 museum passes adding Mystic Seaport, and held two huge Book& Bake Sales.
- The Friends group is also in charge of fundraising for the new building and is partnering with the Community Foundation of North Central Massachusetts.
- The Trustees and Friends have promised to raise at least $410,585.00 for the new library. It is likely that they will exceed that goal.
- Bob Cole taught several watercolor workshops and donated nine of his paintings from these classes to benefit the new library
- The Cub Scouts did a thorough grounds cleaning and mulching in May. Helen Balcom took on the gardens to make sure we looked good for the 275th celebrations.
- Author Amanda Moekel, who grew up in Lunenburg, returned to read from her book, The Organic Adventures of Tucker the Tomato.
- Lots of people volunteered time and made material or cash donations to help Ritter provide better services to the community. A heartfelt thank you to all!

A Most Extraordinary Thing:

As if securing funding for the new library weren't exciting enough, our Trustee chairman, Debra Chapdelaine, won the 2002 Today Show Green Room Book featuring the autographs and doodles of all the guests who appeared on America's #1 morning television show. The book will be sold by the Friends on ebay to benefit the new library.

Trustees: Debra Chapdelaine, Chair, Linda Kennedy, Brian Laffond, Rich Letarte, Diane Guenard, Gare Thompson, and MaryAnn Sudolnik

Staff: Susan Tallman, Director, Patricia Dupont, Kate McCarron, Karen Kemp, Sandy Malilloux, Donna Smetana, and Amy Sadkin

PARK COMMISSION

Commissioners: Chairman- Brian Kane, Cliff Worthley & Jeff Johnson
Superintendent: Tom Leppala

The Town Beach once again enjoyed another successful season thanks to Gen Nass and her staff. Gen and her lifeguards put in a tremendous amount of time to provide lifeguard training, swim lessons, and a safe environment for all to enjoy the beach during the summer. We are still in the process of renovating the Town Beach building. We expect to see some progress with the indoor renovations to include plumbing, electrical, and some interior work. The restrooms, changing rooms and storage area will be rebuilt.

The Summer Basketball program was, as always, a well-run program thanks to Bob Bourque. The league, run at Wallis Park, includes a high school boys and adult men's league. Bob also runs our Winter Men's league. This league consists predominately of Lunenburg citizens and graduates. We thank Bob for giving freely of his time to make these programs a success. Our Winter Junior Basketball program includes children in grades 2 through 8 with approximately 300 participants and 42 teams. We sponsor a 2nd through 4th grade program, a 5th and 6th grade and 7th and 8th grade leagues, and a travel teams league. Many thanks to George Durrance, Tom Diperri, Chris Decot, Rick St. Jean, Sue Marrabello, and Mark Williams for all their time. Special thanks to Cliff Worthley who has run this program for the past 10 years and has done an outstanding job.

We are still supporting the Track and Athletic Fields facility and would like to thank all of the volunteers who have given up an enormous amount of hours to see this project completed.
Bryce Coulombe has completed work on the life course at Marshall Park for an Eagle Scout project. This was a much-needed renovation and we would like to thank him for his hard work.

The Park Department has one full-time employee, Maintenance Supervisor, Tom Leppala. Tom has done an outstanding job for the last 20 years. In our opinion, he is a great asset to the town.

FIRE DEPARTMENT

Scott F. Glenny, Fire Chief

As I write this report the new public safety building is 35% complete. Construction is progressing smoothly and on schedule. We eagerly await moving day in late August or early September when we will occupy our "new home" which will serve the town for many years to come. Our thanks go to the citizens of Lunenburg for their continued support; it is our hope that everyone will join us in the fall when we dedicate the building, and celebrate its opening.

Again this year, we saw an increase in calls for service as the town continues to grow. We continue to be concerned about staffing during the day when most of our call Firefighter/EMT's are out of town at their full time jobs. However, the officers and members of the department continue to search for creative and cost-effective solutions to our staffing needs. Our commitment to training is unwavering, so that we can be prepared for any emergency we may encounter and provide the best protection for the rescuer and the citizens in need.

I would like to recognize all of the town departments who have worked together with us to keep Lunenburg a safe community. I would also like to thank all the officers and members of the department for their dedication and commitment to the citizens of the Town of Lunenburg.

The Fire Department responded to 1,134 calls for assistance and performed 431 inspections. The following is a summary of incidents for last year and a roster of your fire department:

1,565 Total Reported Incidents

53 FIRES TOTAL

- 16 Building fire
- 8 Chimney or flue fire, confined to chimney or flue
- 1 Fuel burner/boiler malfunction, fire confined
- 6 Passenger vehicle fire
- 1 Mobile property (vehicle) fire, other

16 Brush, or brush and grass mixture fire
1 Dumpster or other outside trash receptacle fire
4 Fire, other

1 OVERPRESSURE, RUPTURE, EXPLOSION TOTAL
1 Explosion (no fire), other

705 RESCUE & EMERGENCY MEDICAL SERVICE TOTAL
537 EMS call, excluding vehicle accident with injury
73 Vehicle accident with injuries
1 Motor vehicle/pedestrian accident (MV Ped)
6 Extrication of victim(s) from vehicle
2 Extrication of victim(s) from machinery
1 Swimming/recreational water areas rescue
1 Water & ice related rescue, other
75 Special EMS call
9 Rescue, emergency medical call (EMS) call, other

174 HAZARDOUS CONDITIONS (No Fire)
5 Gasoline or other flammable liquid spill
6 Gas leak (natural gas or LPG)
5 Oil or other combustible liquid spill
6 Carbon monoxide incident
16 Power line down
3 Arcing, shorted electrical equipment
1 Building or structure weakened or collapsed
13 Vehicle accident, general cleanup
119 Hazardous condition, other

520 SERVICE CALLS
5 Lock-out
7 Water evacuation
1 Water or steam leak
1 Smoke or odor removal
1 Animal rescue
4 Assist police or other governmental agency
16 Public service
19 Unauthorized burning
33 Cover assignment, standby, moveup
431 Inspection
2 Special type of incident, other

112 ALARM ACTIVATIONS & FALSE CALLS
2 Bomb scare - no bomb
16 Alarm system sounded due to malfunction
1 Detector activation, no fire - unintentional
93 Alarm system sounded, no fire - unintentional

ROSTER OF FIREFIGHTERS

Scott F. Glenny, Chief of Department

Kenneth P. Paton, Assistant Chief, EMT

David P. Demers, Deputy Chief

Patrick A. Sullivan, Captain, EMT

Kevin Paton, Lieutenant, EMT
Peter Hyatt, Lieutenant
James Ricci, Lieutenant, EMT
Scott Dillon, Lieutenant, EMT-I

Carol Baker, Firefighter/EMT
Jeffrey Bingham, Firefighter
Jason Boyle, Firefighter/EMT
Andrew Burr, Chaplin
Mark Bursch, Firefighter/EMT
Joseph Cardone, Firefighter/EMT
Peter Davis, Firefighter/EMT
Joshua DeFelice, Firefighter/EMT
Erin Fowler, Firefighter/EMT
Michael Glenny, Firefighter
Robert Guinard, Firefighter/EMT
Patrick Hakey, Firefighter/EMT
Christopher Harrington, Firefighter/EMT
David Haueisen, Firefighter
Richard Howard, Firefighter
Daniel Jones, Firefighter/EMT
Jon Jones, Public Information
Kenneth Jones, Firefighter/EMT
Patrick Kazanjian EMT-P
Christopher Lamoureaux, Firefighter
Brian Leblanc, Firefighter/EMT
Joseph Leblanc, Firefighter/EMT
Paul Lucason, Firefighter/EMT
Eric Martineau, Firefighter
Robert Martineau, Firefighter
J. Gregory Massak, Firefighter/EMT
Anthony Newell, Firefighter/EMT
Timothy Paton, Firefighter
Christopher Pentedemos, Firefighter
Charles Sampson, Firefighter/EMT
Timothy Shea, Firefighter/EMT-P
Robert Szocik, Firefighter

POLICE DEPARTMENT

Daniel F. Bourgeois, Police Chief

As the year 2003 passes and we begin preparing for the future, I would like to thank the residents of Lunenburg and all the Town officials who supported our Police Department as well as the Public Safety Building Complex project over the past year. This project would not have become a reality without your support especially during these uncertain economic times. Our department appreciates your continuing commitment in addressing the facility needs of our public safety operations.

The Public Safety Building Committee remains hard at work in an effort to provide the best building and grounds for our employees and the community. To date we are approximately thirty-five percent complete, on schedule and within budget! My personal thanks to my fellow committee members Fire Chief Scott Glenny, Selectman Joseph Bilotta, Patrick Slattery, Marion Benson, Amie DeNault and David Pajari for the countless hours dedicated towards the successful completion of this project. This committee remains committed to providing the Town of Lunenburg with a Public Safety Complex we can all be proud of. The project is located at 655 Massachusetts Ave. and scheduled for completion in August 2004.

This year also included the retiring of Sgt. Steven Whitney, a 31-year veteran of the Lunenburg Police Department. Steve remains a member of our reserve force along with Officer Al Baron who retired in 2002 after 31 years of dedicated service. Our sincere thanks to these officers for their many years of dedication and service to the Town.

I would also like to thank the members of our department for their commitment and diligence as we work through very difficult fiscal times. The year 2003 brought with it a 6 ½% operating budget reduction that translated into the loss of one full-time police officer's position as well as the loss of a part time clerical staff member. These reductions placed an un-welcomed strain on our operation. We are now operating at staffing levels we saw nearly twenty years ago. I'm proud to say that our officers have stepped up to the plate and shouldered the additional responsibilities and workload at a time when public safety needs are greater than ever. Both our full-time and reserve officer staff members are to be commended for their unselfish dedication to our community! Some officers have taken on additional responsibilities such as computer technicians, cruiser maintenance, firearms license processing and clerical work normally done by civilian personnel. I remain determined to locate outside funding sources and grant opportunities that will supplement our operating budget. I will continue to work with Town Officials in order to strike a balance between our shrinking budget and the increased demands on our public safety officers. We must be reminded that when the economy weakens, a demand for public safety services increases.

In 2003 this department applied for and received a $20,500.00 grant from the Executive Office of Public Safety. This EOPS Programs Division / Local Law Enforcement Public Safety Equipment Grant will provide much needed, up to date radio and communications equipment as well as external surveillance equipment for our new Public Safety Building. We also received a $10,000.00 Community Policing grant award, which allows us to provide continuing bicycle patrols in our neighborhoods, jet ski and boat patrols on Lake Whalom and Lake Shirley. These funds allows us to provide pro-active initiatives in our schools such as teen dating violence prevention, drivers education, stranger danger, child identification (CHIPS program) and drinking and driving. These additional grant monies also allow us to continue working with our senior citizen population in providing programs such as the R.U.O.K. senior check-in program, senior citizen BBQ, and various programs geared towards keeping our

seniors safe. We also received grant monies to supplement our traffic enforcement programs. The "Click It or Ticket" and "You drink, You drive, You loose" campaigns are funded by competitive State grant monies.

This department continues to be an active member of the North Worcester County Regional Drug Task Force. This task force is a combined operation of seven area police agencies including the District Attorney's Office, who have joined forces and resources to combat the ongoing battle against illegal drug activity. The task force provides our department with the necessary manpower, resources, equipment and training needed to supplement our current operation in this very important area of public safety. Our thanks to our detective and area detectives and police officers that dedicate and risk their lives on a daily basis to protect our interests.

I would like to thank the residents once again for their patience and cooperation during major road and sewer construction projects in 2003. As we enter another busy schedule of road projects in 2004, I anticipate further delays beginning in March and continuing throughout the year on Prospect Street, Leominster Road, and Massachusetts Ave. in the center area. Please use caution and have patience as our officers direct you through and around these busy construction areas.
As we enter 2004 and begin preparing for the future we are all faced with a struggling local, state and national economy. The constant threat of terrorism, civil unrest in countries abroad and the war in Iraq have caused us to take a closer look at how we protect our citizens at home. We have all been asked to "do more with less" and members of the police department continue to remain committed and dedicated to serving our community. Let us continue to foster and maintain the trust and cooperation of all our citizens and provide a sound public service to all.

Our Police Department logged 11,647 incidents for the year 2003, an increase of 27% from 2002. The following is a brief summary of incident Statistics as recorded in the year 2003:

- Alarm responses..... 643
- Animal complaints.....70
- Annoying/harassing phone calls complaints..... 30
- Armed robbery.....1
- Assault and Battery by Dangerous Weapon.....3
- Assault and Battery.....27
- Assist DPW.....17
- Assist Fire and Emergency Medical response.....380
- Assist other PD (mutual aid).....192
- Attempted Break and Entering.....10
- Attempted Larceny..... 6
- Attempted Murder.....1
- Attempted Suicide.....7
- Bicycle Accidents..... 3
- Boating accidents.....1
- Bomb threats..... 2
- Break and Enter into motor vehicles..... 29
- Break and Enter (business and residential)..... 49
- Community Policing initiatives.....370
- Disturbance Calls..... 80
- Drug violations.....21
- Domestic Abuse investigations..... 86
- Emergency responses to "RUOK" (senior citizens).....45
- Emergency responses to hang-up 911 calls.....209
- Gunshot investigations..... 9
- Indecent Assault and Battery investigations.....3
- Indecent Exposures.....1
- Internet crimes..... .2
- Keep the peace requests..... 16
- Larcenies..... 90
- Motor Vehicle Accidents.....315
- Motor vehicle stops.....1833
- Misc. motor vehicle arrests.....48
- Noise complaints.....112
- Protective Custody..... 8

- Radar operations (directed patrols)..... 181
- Rapes.....1
- Shopliftings.....59
- Stolen motor vehicles.....12
- Stolen snowmobiles.....1
- Suspicious activity complaints.....282
- Threats against persons.....26
- Trespassing.....31
- Vandalisms.....124
- Violations of restraining orders.....12

TECHNOLOGY DEPARTMENT

The Technology Department has many concerns centrally located around funding of the technology within all town departments including the schools. I believe that one-word sums up the last two years. That word is Floccinaucinihilipilification. Floccinaucinihilipilification, which means " the estimation of something as valueless", has occurred all too often. If technology has not been categorized as such, then funds should correspondingly go up. They have dropped significantly, and will bottom out in FY '04. Please remember Floccinaucinihilipilification.

The results of such happen immediately. Delays, inoperable computers out of warranty, viruses, printers, and lack of training are the results. A technology support team of two, who do solve the problems, are very stretched. Nerves of the users stretched. Worst of all, faith in the equipment lost.

The Federal Technology Budget percentage is 3% of the overall budget. Comparisons of Massachusetts school districts has an average of 4% of the overall school budget going toward technology. Lunenburg is far from that at the town level (excluding the schools) is 2%, and the school is at just less than 1% of the overall school budget. FY '04 is very bleak.

Technology must be kept up with. The Needs Analysis completed yearly should be adhered to. The budget needs to have dollars for software and licensing. Staff needs to be trained, and support staff reinforced. I understand about the budget problems, but technology is the tool used everyday. If we could go back to paper and pencil, we would need to hire at least two people extra per department, or 24 positions, at an average of $20k per year is $480,000 per year for administration (not including taxes and insurance)!! The funding at the end of the needs analysis was $460,000 including funding for all instructional technology (computer labs, student computers, etc.). That is a savings of at least $20,000 just in the administration. I have tried many ways to convey the needs for technology in the town. The thought process has to change in technology from crisis handling to preventative maintenance. The data and function is just too valuable.

At this time, I would like to give two thumbs up to: Beth Caron (keeping me sane), High School Interns, and The Snowplows.

ZONING BOARD OF APPEALS

The Zoning Board of Appeals heard several petitions in 2003. Thirty-six applicants were seeking Special Permits, Variances and Findings.

The functions of your Zoning Board of Appeals as required by statute are as follows:

1. To hear and decide applications for Variances from the Towns Protective By-laws, as authorized in the By-laws.
2. To hear and decide application for Special Permits as authorized in the Towns Protective By-laws.
3. To hear and decide appeals in accordance with Chapter 40A, Section 8 of the Massachusetts General Laws, as amended, from any person aggrieved by reason of his or her inability to obtain a permit or enforcement action from the administrative officer or Board in the Town, the Regional Planning Agency, abutting City or Town or other administrative official.
4. To act upon applications for compressive permits in accordance with Massachusetts General Laws, Chapter 40B. The Zoning Board of Appeals reviews requests for comprehensive permits submitted to the Board under Chapter 40B by developers who wish to create affordable housing. These requests can, by law, circumvent local zoning ordinances.

The Zoning Board meets on the second and fourth Wednesday of each month on an "as needed" basis. The Zoning Board office is located on the second floor of the Town Hall. Office hours for the Zoning Department are Mondays 8:00-3:30, Tuesday 8:00-

6:30, Wednesday 8:00-3:30, Thursday 8:00-3:30 and closed Friday. Applications for Zoning Board filings may be obtained in the office of the Town Clerk during regular business hours.

The Zoning Board of Appeals consists of the following members: Donald F. Bowen, Chairman, Samuel J. Costa, John S. Czarnecki, Alfred J. Gravelle and Raymond Beal. Associate members are James Besarkarski and Peter Beardmore. Lisa Normandin serves as Administrative Assistant to the Board.

275th ANNIVERSARY COMMITTEE



Logo Designed by Kimberly Morse

Lunenburg celebrated the 275th Anniversary of Incorporation as a town in 2003 with a variety of events ranging from the First Knight on December 31 2002 to the burying of a Time Capsule on October 25, 2003.

Committee members Edward Dextraze and Peter Lincoln coordinated First Knight, much to the delight of children and grownups alike. Technical coordinator Dean DeFrancesco and volunteers from the Lunenburg and Fitchburg Local Access Channels assisted with the arrangements. This event was also a "first" to be broadcast live to viewers in Lunenburg, Fitchburg and Leominster. The refurbished Town Hall Clock tolled at midnight, the steeple bell rang to usher in the New Year and fireworks lit up the sky to usher in Lunenburg's 275th Year!

A Valentine Dance on February 14th at the Eastwood Club in Fitchburg had townspeople of all ages dancing the night away. Committee member William Proctor, assisted by his family coordinated this event that was also a fundraiser to support other activities. On Sunday, May 25th in Veterans' Park townspeople gathered for a Memorial Day program led by members of the American Legion with a Pancake Breakfast at the Eagle House sponsored by the Council on Aging.

The Town Band under the direction of Steven Archambault presented their usual summer concerts on the Lower Common with 275th commemorative shirts for sale by Judith and Marc Forget. A performance by the Yankee Brass Band on July 24th drew a standing room only audience in the High School auditorium for a concert of period music performed on authentic Civil War era instruments.

Rain forced moving the opening ceremony for Old Home Days on August 1st, the actual date of the incorporation of Lunenburg as a town in 1728, to the High School auditorium. The abbreviated program included a gift from then Postmaster John Dowd of an enlarged "Happy Birthday" stamp that was later displayed at Ritter Library. Those in the audience were treated to a piece of a "Happy Birthday Lunenburg" cake and also received one of the 275th wooden nickels that featured the 275th Logo. During the day, the Lunenburg Post Office clerks, under the direction of Mr. Dowd, provided a Mobile Post Office where special envelope cancellations, which included the 275th Logo, were for sale. When the rain abated some three days later the gigantic ground and air fireworks display was judged "the best we have ever seen!" DJ Ned Pratt provided music, which pleased the audience and enhanced the fireworks. The Boy Scouts sold light sticks and other items.

Tour Day on August 2nd featured narrated trolley and self-guided tours of the town center. Greeting those on the tours as reenactors were Jan Barney and her son Michael Robert as Lois and Joseph Bellows, former residents of the Bellows House on Memorial Drive, now part of the Eagle House Senior Center. Diane Guenard portrayed Catherine Watson, who donated funds to construct the Ritter Memorial Library in memory of her mother, Elizabeth Ritter. Gare Thompson, Debra and Nicole Chapdelaine were the Cushing family who lived in the second oldest house in Lunenburg. Curtis Sampson was Luther Burbank who perfected his famous potato at the Jones property on Main Street and Jean and Bud Larkin acted as the Town Pound Keepers. Narrators for the tours were 275th committee members Mary Bingham, Helen Brockelman and Jean Hobbs and Katherine Lowe. Joanne McQuade and students at Lunenburg High School prepared a brochure listing the trees in the town and a map of their location.

The Lunenburg Historical Society opened their building to the public as did the United Parish Church, and Ritter Memorial Library. Also open were the Eagle House where photographs of Lunenburg scenes by Peter Lincoln were on display and the Town Hall, featuring Civil War reenactor Michael Daly and a view of the marble tablets listing those who lost their lives in the Civil War. Other happenings were a Children's Parade of decorated carriages, bikes and wagons and other children's activities coordinated by the PTO and School Community Links, plus a Crafter's Marketplace, arranged by Michelle Banton and Kimberly Massak. Caroline Henriques even brought her alpaca's which delighted the children, as did the pony rides. In addition, an art exhibit and sale organized by Karen Kemp and Ena Thompson featured local and area artists with box luncheons available from the St. Boniface Woman's Group. As a crowning touch, auctioneer Paul Royka auctioned off of a painting of the Town Hall donated by former resident and noted artist Donald Demers. The Lunenburg High School Alumni Association met in the evening at the Bull Run in Shirley.

Donald Adams directed a performance of combined church choirs on Sunday, August 3rd at the United Parish Church, and the Lunenburg Woman's Club sponsored an afternoon tea at the Harley House. Ritter Library staff held a "Ritter Day for Children" on Tuesday, August 5th. "Under The Buttonwood Tree II", an historic pageant was performed on August 8, 9 and 10 in the high school auditorium. This production, authored by Marj Lucier, was also part of Lunenburg's 250th celebration in 1978. Janet Cragin directed this production with residents of all ages in the cast. Narrators were Richard and Helen Brockelman and Peter Lincoln, with Diane Guenard, pianist, and Jen Nass, choreographer. A "Then and Now" Fashion Show and Garden Luncheon on August 20th at the Harley House was coordinated by Marion Benson and Elaine Murphy. Entertainment was provided by the Musical Chairs Quartet.

The 275th parade on Sunday, September 7th featured the Shriner Marching Units, bands, local floats, vintage cars and a variety of marchers. 275th Committee members Kathy Comeau and Peter Lincoln were co-chairmen of the Parade sub-committee with Stanley Barney, Richard Bishop, Kathy Dupuis, Ray MacCracken, Joel Monaco, and Joann O'Sullivan. They were assisted by Debbie Lincoln who coordinated the entry information and William Proctor in charge of fund raising. 275th Chairman and Vice-Chairman Jean Hobbs and Donald Gillis were parade narrators. The parade was video taped by the Lunenburg and Fitchburg Local Access Channel personnel.

The Teen Center Committee, Chairman Lois Block, hosted a Gala Dinner Dance at Sheraton Four Points in Leominster on Friday, September 26th as a fundraiser for their project. This event was sold out and an indication of the support by residents for the teen center, now under construction on Memorial Drive. The 275th celebration concluded on October 25th with burying of a Time Capsule on the Upper Common with various items pertaining to the 275th observance and the town as it is today. 275th Committee members Robert Bowen, Peter Lincoln and Edward Dextraze were in charge of gathering the contents for the capsule. The cover is engraved with instructions to open the capsule when Lunenburg observes the 300th anniversary 25 years from now in 2028.

The 275th Committee would like to recognize Amy Whitcomb Ricciuti who composed the words and music for an "Anthem for Lunenburg" performed at several of the 275th events, and Dr. John Murphy, who not only wrote a "Lunenburg" poem, but read it with deep feeling at the closing ceremony. Programs along with videos and photographs of the 275th Celebration were donated to the Lunenburg Historical Society to be part of their archives and available for viewing.

It is just not possible to list everyone who was involved in the 275th Anniversary Celebration. The 275th Committee wishes to extend our deepest thanks to those who assisted in any way, be it financial support, in-kind donations or discounts or serving in any capacity as a volunteer. We could not have done what we did without your participation and support.

A THOUSAND THANKS TO YOU ALL!

The 275th Committee was composed of Chairman Jean Hobbs, Vice-Chairman Donald Gillis, Secretary Helen Brockelman, Treasurer Charles Deming, Sr., with members Mary Bingham, Robert H. Bowen, Kathleen Comeau, Edward Dextraze, Peter Lincoln, Ray MacCracken, and William Proctor, Sr.

$CHOOL$

MONTACHUSETT REGIONAL VOCATIONAL TECHNICAL SCHOOL (MONTY TECH)

The Montachusett Regional Vocational Technical School District Committee presents this report to the citizens of the District. The Committee consists of twenty-two (22) members – four from Fitchburg represented by Sunnie Epstein, James O'Donnell, John E. Murray, Jr. and LeRoy Clark, two from Gardner represented by Helen Lepkowski and Charles R. LeBlanc and one from each of the communities of Ashburnham – represented by Diane Swenson, Ashby – represented by Warren Landry, Athol – represented by Toni L. Phillips, Barre – represented by John Scott, Harvard – represented by Dr. Henry Lefkovits, Holden – represented by Nancy Anderson, Hubbardston – represented by Jacqueline B. Kaminski, Lunenburg – represented by Dr. Charles F. Valera, Petersham – represented by Edward Simms, Phillipston – represented by Eric Olson, Princeton – represented by John Mollica, Royalston – represented by Mary C. Barclay, Sterling – represented by Dr. Kenneth I.H. Williams, Templeton – represented by David Roche, Westminster – represented by Jeffrey Schutt and Winchendon – represented by Burton Gould, Jr.

At the organizational meeting held in June, Dr. Charles F. Valera of Lunenburg was elected Chairperson, Ed Simms of Petersham was elected Vice President, Norman LeBlanc was elected Treasurer, and David LaPierre (now deceased) Superintendent-Director was elected District Clerk.

FINANCIAL REPORT

Preparing and development of the fiscal year 2004 budget was a difficult task, considering the state's financial crisis as well as the impact it was having on our member communities. With great cooperation, all member communities passed our Educational Plan. This plan reflected basically a level funded budget. The final Educational Plan totaled $15,148,300 for fiscal year 2004.

The yearly audit of the district's books was completed in August by the accounting firm of Melanson & Heath from Greenfield, Massachusetts. An excellent report was received.

STUDENT BODY

Montachusett Regional Vocational Technical School's enrollment as of October 1, 2003 included 1,168 students in grades 9 through 12. Students were representative of all eighteen (18) communities in the district. Enrollment from the district communities was as follows: Ashburnham (52), Ashby (44), Athol (102), Barre (19), Fitchburg (341), Gardner (128), Harvard (0), Holden (47), Hubbardston (33), Lunenburg (52), Petersham (10), Phillipston (19), Princeton (22), Royalston (19), Sterling (42), Templeton (53), Westminster (52), and Winchendon (100). In addition, there are 33 out of district students attending.

The Guidance/Admissions Department processed 741 applications for admission in September 2003. Of these, the majority were for the 350 available ninth grade openings. This was one of the highest numbers of applications in recent history. Transfer opportunities for students in grades ten and eleven continue to be where space is available.

Monty Tech continued to offer numerous opportunities for students, parents and community members to become knowledgeable about and visit the school. In October, over 1,800 eighth graders participated in Tour Days. Students toured our 21 vocational-technical areas and learned about the challenging academic offerings and exciting athletic and extracurricular programs. Career Awareness Night followed Tour Days. This Open House, as well as the spring Open House, was attended by hundreds of students, parents and community members from throughout the district. The Vocational Interest Program (V.I.P.) continued to attract large numbers of seventh and eighth graders during two separate five-week winter sessions. Participants had opportunities to attend hands-on after school sessions in a variety of vocational/technical areas.

The J.R.O.T.C. Program had its second successful year. Cadets showed their skills and our school by participating in numerous flag ceremonies. The Drill Team earned recognition in both state and regional competitions. Select cadets attended and enjoyed mock boot camp at Camp Quantico in Virginia. Student interest in this program continues to grow considerably throughout the year.

In June, the class of 2003 graduated 211 seniors. These graduates received diplomas and technical certificates. Approximately 95% of the graduates planned to continue their education at the post-secondary level or work, while another 5% planned to enter the military service. The Tech Prep Articulation Agreements with local colleges continued to play an important role in helping our graduates enter college with credits earned at Monty Tech. Nearly half of our graduates entered a two or four year college. This number has grown nearly every year.

The Scholarship Committee awarded approximately $18,000 in scholarships to members of the class of 2003. Once again, local (Business Education Enrichment Foundation) and state organizations, as well as generous individuals, continue to recognize the ability and potential of Monty Tech graduates in the forms of grants and scholarships. The School Committee, administration, faculty and graduates themselves are grateful for this support.

FACULTY AND STAFF

The Monty Tech family was saddened last summer by the unexpected death of our Superintendent-Director David LaPierre. Although Mr. LaPierre had only been with us for two years, he was highly respected by teachers, students, staff members, administrators, School Committee members and the district communities as an educational leader and person.

There were many administrative changes this year. Monty Tech started the school year with a new acting Superintendent-Director, Principal, Assistant Director for Business Affairs, Academic Coordinator, Vocational Coordinator, Guidance Coordinator, Dean of Students, Grants and Accountability/Co-op Coordinator, Plant Supervisor and Postgraduate and Continuing Studies Coordinator.

The School Committee welcome new faculty in science, the early childhood education program, plumbing and office technology. The current staff includes fifty-four vocational teachers, forty-two academic teachers, five special needs teachers, five vocational inclusion aides, one vocational specialist, four guidance counselors, one social worker, one school adjustment counselor, two deans of students, one and one-half nurses, one part-time school psychologist, one part-time speech and language therapist, six interpreters for the deaf and one media specialist.

CURRICULUM

The class of 2003 was the first class that was required to pass the English Language Arts and Math components of MCAS in order to graduate with a high school diploma. Our scores have risen steadily over the last three (3) years. The following represents the percentage of our students who passed each component:

	2001	2002	2003
English Language Arts	57.6%	71.9%	82%
Math	54. %	52.4%	71%

There are many programs that contribute to these increases. Included among them are: English and Math Curriculum Work, Study Skills (grades 9 and 10), Summer MCAS Camp and other innovative strategies using on-line and print resources as well as after school programs. Grants have been secured to fund much of these activities.

Data analysis of MCAS testing data was done and remedial programs in English Language Arts and Math began for students who did not reach the minimal level of 220. A correlation was made between poor attendance and poor performance in MCAS and a new attendance policy has gone into effect for the 2003-2004 school year.

The Vocational-Technical Programs continued their tradition of house building with the completion of their 27th building project, which were three (3) first-time homebuyer affordable houses in Gardner. This was done in conjunction with the City of Gardner, the Greater Gardner Community Development Corporation and the Gardner Franco-American Credit Union.

In addition to the house-building project, the vocational-technical areas continue to provide communities in the Monty Tech District with a number of services as a component of their individual curriculums. The projects listed below are but a few of those accepted this year.

Automotive Technology
1. Repaired mechanical problems – Fitchburg Fire Department Fire Truck

Building & Grounds
1. Friends of Sholan Farms
2. Montachusett Home Care
3. Fitchburg – Art in Bloom

Cabinetmaking
1. Cabinets for the three Gardner CDC homes
2. Gardner – Sign for Elm Street School
3. Fitchburg – City Hall Podium
4. Fitchburg – Twin City Girls Basketball (Wooden Plaques)
5. Fitchburg – ARC Display Board

Cosmetology
1. Monthly visits to Gardner High Rise for Hairstyling and Manicures

Culinary Arts
1. Ashburnham/Westminster – Oakmont Regional H.S. National Honor Society Dinner
2. Fitchburg YMCA – Cake
3. Lunenburg – Eagle House Senior Center – Cake
4. Montachusett Area – NEED's Dog Graduation Cakes

5. Legislative Breakfast
6. Fitchburg Baseball Official's Dinner
7. Fitchburg – Our Father's House (leftovers from weekly menu items)
8. Gardner Elderly (leftovers from weekly menu items)
9. St. Anthony's Church in Fitchburg – food for homeless families
10. Mount Wachusett Community College – Ice Carving
11. Pastry for Salvadore's – Driver Education Program
12. Twelve Senior Citizen Luncheons for District Cities/Towns
13. Thayer Symphony Orchestra Reception
14 Volunteer Dinner for Montachusett Home Care

Dental Assistant

1. Partnering with Gardner Public Schools – Visited twenty-four 1st and 5th grade classrooms and conducted oral health classes and distributed oral health kits

Electrical

1. Electrical Wiring for the three Gardner CDC homes
2. Re-lighting of Scout Hall in Templeton
3. Community Service – Rough and Service Wiring for a New Home for a Disabled Child in Ashburnham

Electronics

1. Fitchburg – repaired camera truck

House Carpentry

1. Built three affordable housing homes in partnership with Gardner CDC
2. Built School Book Cases for Waterford Street School in Gardner

Graphic Communications

1. Town of Westminster (Note Cards for Town Manager, and Town Benefit Days Placemats and Envelopes for Westminster Police Department
2. Westminster Lions Club – Breakfast Placemats
3. Town of Hubbardston – Town Vouchers
4. City of Fitchburg – Football Program for Fitchburg High School
5. City of Gardner – Calendar for Gardner Public Schools; Score Cards for Gardner Municipal Golf Course; Public Service Announcement and Vouchers for the city; Gardner Music Boosters – raffle tickets; Gardner Public Schools, copies of "Hugs & Kisses"
6. Town of Templeton – Baldwinville Elementary PTO Raffle Tickets; Narragansett Regional School District, Business Cards and Envelopes
7. Town of Winchendon – Business Cards
8. Town of Ashburnham – Letterheads and Business Cards for Ashburnham Police Department and Pamphlets for Overlook School
9. Miscellaneous – Amvets Post 29 Newsletter; Polish Amvets Raffle Tickets; MOC Elder Services Envelopes; Montachusett Home Care Ombudsman Postcards – Business Cards – Golf Classic Invitations; LUK, Inc. Booklet; Fitchburg Access TV Cable TV Survey and Newsletter; Fitchburg Art Museum Brochures and Art in Bloom Invitations; St. Joseph's Variety Show's Tickets and Posters; Templeton Development Center Ticket Flyer

Machine Technology

1. Slattery's Turkey Trot – cut rolls of caution tapes
2. City of Fitchburg – Made hydrant wrenches for Water Department

Plumbing

1. Plumbing and Heating for the three Gardner CDC homes

SPECIAL SERVICES

The Montachusett Regional Vocational Technical School District, in the last calendar year, has provided special education services to 486 students. Presently, there are 263 identified eligible students who are receiving special education instruction in academic and vocational education. Our mission is to comply with Public Law 105-17, and the 1997 amendments to the Individuals with Disabilities Education Act (known as "IDEA-97") and Chapter 766 of the Acts of 1972, MGL C.71B (603 CMR 28.00) to provide a free appropriate public education (FAPE) to students with disabilities in the least restrictive environment.

We affirm the need for higher expectations of student performance, preparation of students for employment and independent living, more comprehensive coordination of supports with other agencies, high quality professional development, incentives for whole school educational approaches that promote inclusion of special education students in regular education classes.

The student support services at Monty Tech are available to all students. We have a full-time school nurse (R.N.) with a part-time assistant (CNN) who administers prescribed medications, performs state mandated health screening tests and provides, when necessary, health information for the student's Team meeting. We have a full-time school social worker who is able to

participate on Teams and assist students who have needs concerning finances, family issues, living space, maternity issues, health issues, and food and clothing. Our students have access to the services of a full-time adjustment counselor and a part-time school psychologist. Both of these people are available for scheduled counseling sessions and emergency treatment or crisis intervention. Additionally, there is a Director of Guidance and four other certified guidance counselors available for counseling services for students in grades 9 –12. Our speech therapist is contracted to service students per week. Two vocational resource aides work with the special needs students in their trades to make sure that the trade is appropriate to the students' capabilities and aspirations. All of our teachers with special education certification are considered in the "highly qualified" category of NCLB.

The Monty Tech Program for Deaf and Hard of Hearing is a day program for students in grades 9 – 12 and was established in August 2001. It is providing a comprehensive vocational and academic educational program for students identified as being sensory impaired in the area of hearing. Presently, there are seven students being served by one certified teacher of the deaf with two full-time interpreter assistants and two part-time interpreter assistants and a speech pathologist. All of these students, except one, are placed in regular education classes with assistance from interpreters. The climate and culture of the Monty Tech environment have made for a very successful integration of the deaf program. The staff and students are dedicated to respectful interactions within our school and community to maintain a positive, caring and safe environment for all of our students.

The Special Education Program at Monty Tech is reviewed every May in accordance with regulatory requirements. The results of this evaluation are used to improve the special education procedures and programs at Monty Tech. The Parent Advisory Council will participate in this review and evaluation. They will have the opportunity to give input on program needs, program implementation, and program evaluation and improvement.

The Montachusett Regional Vocational Technical School District adheres to federal and state law regarding confidentiality of personally identifiable student information. Specifically, this school adheres to Massachusetts state regulation 603 CMR 23.00.

Student records at Monty Tech are kept in a secure location in the school's Guidance Department. It is understood that parents and eligible students have the right to inspect all portions of the student record upon request, within a two-day timeline.

STUDENT AFFAIRS AND ATHLETICS

WOMEN IN TECHNOLOGY: Through a partnership with Tyco Simplex/Grinnell, Leominster CTE and Oakmont Regional High School, Monty Tech enabled 8 students from 5 different vocational technical areas, to experience technology in a true business setting.

Twice a month, the students from all three schools went to Tyco Simplex/Grinnell to work with the engineers and information technology staff to solve specific problems the company was having. The engineering group was charged with solving a problem with a Nurse Call Box used in hospitals. The IT group worked to improve the company's web site and set up an effective Help Desk System. The project spanned from October 2002 through May 2003.

In May, the students gave presentations to the employees at the company as to how they solved the problems. Additionally, the presentation was given at a Greater Gardner Chamber of Commerce Breakfast. Finally, two students and three of the adult mentors traveled to Nashville, Tennessee in October 2003 to present this project at a National Tech Prep Conference. The experience was invaluable to all involved, and we will continue this partnership/project based learning experience in this current school year.

FIRST ROBOTICS TEAM: We are entering our fourth year as participants in the FIRST Robotics Competition. During the 2002-2003 school year, there were 40 students who participated in this program to brainstorm, build, analyze, test and run the robot they built. The competition was a three-day event in March at the BAE Systems Granite State Regional in Manchester, NH. The team, which was made up of Superintendent LaPierre, Mr. Culkeen and engineers from Tyco, school advisors from Monty Tech, Fitchburg High, Oakmont Regional High, several parents and students was at 50 in number. They commuted back and forth over the three-day event.

The competition itself was much tougher than anticipated – fast paced and rough and tumble. Redesign strategies were put in place during the competition, which proved to be a good decision. The team finished an impressive 17th out of 44. All involved felt the team put forth its best effort.

SkillsUSA-VICA: We had a total of 388 students participate in the co-curricular activities included in the SkillsUSA-VICA organization. Additionally, twenty teachers were involved as advisors, mentors, coaches and/or a combination of all three. Fifteen students participated in a 3-day Student Leadership Program in the fall, and all came home with a medallion for finish 1st, 2nd or 3rd place with their teams.

In January of 2003, we held our location competition, which is a qualifying round for the district conference held in March. Each of the 21 vocational-technical trade areas held competitions within a 2-week period. We took over 130 students to the district conference in January 2003 and returned from that conference with 43 medals. Eighty students went to the state conference in May 2003 to compete in leadership skills, trade skills and state officer candidate. We returned from that conference with 22 medals and a SkillsUSA-VICA state officer. Five of the 22 medallists were gold medal winners, who went on to compete at the national conference in June of 2003. All five medallists finished their SkillsUSA-VICA experience in the top 5% of competitors in the country. We are very proud of them!

The Monty Tech Athletic Program had another successful year in 2002-2003. Again, over three hundred and fifty (350) students were involved in one or more of our teams. We ran a Freshmen Girls Basketball team for the second year in succession.

Monty Tech was hit with the budget crunch, as was the case in all schools in the area. In the accepted budget for 2003-2004, we lost Freshmen Football, JV Football Cheerleading, JV Girls Soccer, and Freshmen Girl's basketball, JV Basketball Cheerleading and the Assistant Track & Field coach. The athletes and coaches worked very hard to raise money to restore some of these programs. With the Athletic Program Ad Booklet and some donations, we were able to raise over $10,000. We were able to run the Freshman Football program this fall and a JV girls soccer program. We plan to run the Freshmen Girls Basketball program this winter. If money holds out, we will try to run other programs in the future. We will collect ads for another Program Booklet for 2004-2005 to help future programs as well.

Last fall, the Varsity Football team finished at 4 – 7, and showed improvement over the previous year. The JV Football team was 4 – 2 – 1, while the Freshmen Football team was 4 – 2. Our Varsity Boys Soccer team finished at 5 – 6 – 5 and missed the post-season tournament by 1 point. The JV Boys Soccer team was 4 – 6. The Golf team won 6 and lost 12 but showed promise for the future with no seniors on the squad. The Field Hockey team was 1 – 15 – 1 as they won their last game of the year to get into the win column. Dee Pananos, along with the Fitchburg Police, held the annual Police vs. Student Field Hockey game to raise money for a scholarship. It was very successful. The Cross Country team was 8 and 5 and finished 2nd in the Colonial Athletic League meet. The Girls Volleyball team slipped to 3 – 14 and had only 1 senior on the team as the girls look to improve next year. The varsity Girls Soccer team was 8 – 8 – 3 and qualified for the District Tournament, where they lost to a tough Bromfield squad, 3 – 0. The Varsity Cheerleaders finished 4th in the fall CAL Competition held at Monty Tech.

The winter season saw our Varsity Boys Basketball and Girls Varsity Basketball teams qualify for the District Tournament with some fine play throughout the year. The Varsity Boys were 13 – 8 and played Maynard in the first round, where they lost 64 – 51. The Varsity Girls were 16 – 4 and won the Colonial Athletic League Championship. They lost in the first round of the State Vocational Tournament and the District Tournament as well. The JV Boys Basketball team was 11 – 6 and played with a lot of desire and pride. The Freshmen Boys were 4-16. On the girl's side, the JV Girls Basketball team was 18-2 and enjoyed many easy victories. The Freshmen Girls team went 3 – 3, as they prepared to move up this year. The Wrestling team was 3 – 4 in dual meets and participated in many tournaments. Travis Pelletier and Bill Sawin moved on in the State Tournament, as they wrestled very well. The Co-op Ice Hockey team did very well, with a young group of talent and look to improve this year. With the number of students participating, we were able to have a JV Ice Hockey team as well.

In the spring, the Varsity Softball team enjoyed another fine season. They finished at 14 – 7 and finished 2nd in the Colonial Athletic League. Coach Dave Reid won his 400th career game as Monty Tech's coach in the last regular season game. They participated in the State Vocational Tournament, where they lost to Tri-County 7 – 5. They played Douglas in the District Tournament and lost 5 – 2 in a well-played contest. The JV Softball team was 9 – 3 and Coach Reid is looking forward to the arrival of these younger players this year. The Boys Volleyball team was 3 – 11, and the Varsity Baseball team finished at 4 – 16. The JV Baseball team was 3 – 8 – 1. The Boys Track & Field team was 10 – 2 and finished 2nd in the Colonial Athletic League while the Girls Track & Field team was 4 – 8 and tied for 3rd.

The Outstanding Male and Female athletes for 2002 – 2003 were:

Male: Tom Landry and Nick Gallotto
Female: Sheena Silvia

TECHNOLOGY

The Technology facilities provided to the staff and students of Monty Tech remain among the best in the commonwealth. The number of computer workstations, Local Area Network structure, Internet access and applications available rival those of many large corporations. With this growth has also evolved an increased recruitment for support of the services we deliver. In addition to routine tasks such as workstation setups and upgrades, the monitoring of network performance, eliminating virus infections and maintaining servers have all contributed to a marked increase in the demands placed on the Technology Office.

Electronic communication has also been expanded. The morning bulletin is now delivered via the web and the Student Information System is entirely web based allowing access from any Internet connected computer at school or home.

Wireless Technology has expanded to include not only the Media Center but also a mobile laptop lab. About one third of the building is now configured with wireless access points. The TV Studio continues to produce daily morning exercises. Technology, in this area, has been upgraded to include high quality digital non-linear video editing and DVD production.

As reported last year, we are very proud of our Technology Help Desk, which is manned by students from the Information Technology Program. Response time to related problems is usually less than four (4) hours.

GRANTS AND CONTRACTS

Monty Tech continues to aggressively pursue grant funding to assist the school in providing a comprehensive array of educational and social services for its students. Money from a variety of state and federal sources totaled $904,988 for fiscal year 2003. These state and federal sources include: Academic Support Services, Class Size Reduction, Eisenhower Professional Development, High Schools That Work, PALMS, Professional Development, Perkins, Perkins: New Technology, Tech Prep, Safe and Drug Free Schools, Safe Schools for Gay/Lesbian Students, Special Education, Special Education Professional Development, Title I, Title V, Title IIa, and Title IId.

CONCLUDING STATEMENT

The School Committee, administration, faculty and staff are truly proud of the accomplishments achieved by the students and staff of Monty Tech during the past school year.

As you may or may not know, this year, the Monty Tech family suffered two significant losses. In April, we lost Sally Spry, one of our Early Childhood Education instructors, and in August, David LaPierre, our Superintendent-Director passed away. Both of these individuals are missed by all of us at the school.

Monty Tech remains committed to continued improvement in the high stakes testing and academic accountability requirements of the commonwealth as well as providing comprehensive educational opportunities to assist our students with the vocational skills and knowledge necessary to be productive members of society.

We look forward to continued growth and are committed to providing the best possible educational opportunities to the students of our member communities.

LUNENBURG PUBLIC SCHOOLS

Lunenburg School Committee

Chairperson:	David Relf	Term Expires: 2005
Vice-Chairperson:	Milree Keeling	Term Expires: 2004
Secretary:	Jennifer Benson	Term Expires: 2006
Member:	Gregory Berthiaume	Term Expires: 2004
Member:	Seymour Schnuer	Term Expires: 2005

Regular Meetings

First Thursday of each month - 7:00 at Town Hall -Televised
Third Wednesday of each month - 7:00 p.m. at Brooks House
Special or changes in meetings are posted at Town Hall

Central Office Personnel

Office of the Superintendent of Schools
Loxi Jo Calmes, Superintendent
Karen Martin, Director of Instructional Services
Mary Landi, Executive Secretary

School Personnel/Business Services
Sandra Curley, Personnel Manager
Louise Parent, Business Manager

Transportation Services
McCarty Limousine

Cafeteria Services
Managed by Chartwells, Inc.
Kevin Richardson, Director

Student Services Office
Elaine Blaisdell, Coordinator of Special Services
Frances McCluskey, Administrative Secretary
Nancy Stachowicz, Secretary

Office of Facilities & Grounds
John J. Londa, Director
George Brooks, Maintenance Person
Robert Roy, Maintenance Person

Stephen Schaff, Senior Groundsperson

SUPERINTENDENT'S MESSAGE

Loxi Jo Calmes, Superintendent of Schools

Our Vision: The Lunenburg Public Schools prides itself on excellence. We provide a child-centered environment that challenges all learners to achieve their highest potential. This is accomplished through a partnership with a supportive community.
Our Mission: We prepare our students for life-long learning and responsible community membership.
Our Guiding Beliefs:

- Education is a community partnership.
- Learning is reflective, creative, on-going and takes place in all environments.
- A successful school actively engages students and staff.
- All students have talents and can excel.
- Professional growth is fundamental to instructional excellence.
- All students are capable of learning and are entitled to instructional excellence.
- Staff and students are entitled to a safe, healthy and positive learning environment.
- An atmosphere of mutual respect is essential for learning.

On August 26 2003 our schools filled with children and youth and another school year began with the energy, hope, and promise. The teachers, staff and administrators returned to their jobs, renewed, refreshed, focused on our mission and mindful of our primary goal - to improve student performance. The previous year we had said farewell to 129 seniors in the Class of 2003. Of those graduating 66% of our graduates planned to attend a 4-year college, 17% a 2-year college, 3% have other post-

secondary education, 1% planned to join the military, 8% were going directly to work, and 5% were undecided. We also said farewell to retirees Margaret Zottoli (LHS Business), Charles Tarleton (LHS Science), Jean McLaughlin (LHS English), Dennis Keeney (THMS Technology), Louise Morin (TCP Grade 4), and Wade Collier (Maintenance).

We are all excited about the visible progress in the construction of the new primary school. Completion is anticipated for December 2004. The members of the School Building Committee Lynn Sallee (Chair), Joseph Bilotta, Ernest Hunter, Jennifer Benson, Scott Doty, Jerry Benson, and Seymour Schnuer have been diligent in their work and the construction is on schedule and within the approved budget. Throughout this school year various building-based and district-wide teams worked on our transition plans. We hope to move the PK, K, and Extended Day programs into the new primary building in January 2005 if the sewer project goes ahead as scheduled. Ultimately, the grade configuration of our buildings will be as follows: PK- grade 2 and extended day will be located in the new primary building; T.C. Passios will serve students in grades 3-5; Students in grades 6-8 will continue to attend Turkey Hill Middle School; and LHS will remain a 9-12 high school.

Throughout the year our faculty and administrators have participated in numerous and varied professional development opportunities. As a learning community we recognize that our own growth is central to the growth of the students we serve. Under the leadership of Karen Martin, Instructional Services Director, many of these professional opportunities were provided on-site. Because of our results based model, we will continue to identify instructional needs based upon the data and interventions based upon effective practices that are supported by research. Our schools offer a range of services and supports for ALL students. Ms. Elaine Blaisdell, our newly appointed Student Services Coordinator, continues our commitment to provide quality educational services to students with disabilities. Additionally, significant adjustments were made in our Title I program in order to improve student outcomes.

The Lunenburg Public Schools is a learning community. We recognize that people accomplish more together than in isolation and encourage regular, collective dialogue about our goals in order to sustains commitment and nourish our mission. This is based upon on concrete evidence of progress and engagement with our students, their parents, and the community. We know that if we collectively focus on goals and regularly measure the impact of the methods we are learning from each other, we will get better results. That is our focus and our promise to our students.

Strategic Plan 2003-2006 Goals and Objectives:

1. To foster the talents, skills, and potential of all students.
   - 1.1. To expose all students to a variety of opportunities to explore individual interests and talents.
   - 1.2. To develop a process and structure for implementing transition plans for each student.
2. To ensure that staff and programs are conducive to instructional excellence.
   - 2.1. To develop and implement a process of data-drive decision-making.
   - 2.2. To create a professional development program based on data and need.
   - 2.3. To identify staffing needs and make recommendations for hiring staff.
3. To use technology as an integral component of teaching, learning, and management.
   - 3.1. To develop a district technology plan to address equipment and staffing needs.
   - 3.2. To provide professional development to raise the level of appropriate technological use in the instructional program and to improve communication.
4. To provide facilities that meet staff, program, and community needs.
   - 4.1. To complete a needs assessment for building transitions related to construction of the new primary school.
   - 4.2. To develop and implement a centralized process for building use.
   - 4.3. To work in partnership with the community to promote present and future capital projects.

I want to extend my thanks to the Lunenburg community for all the support they have provided the Schools throughout the year. Working together, everyone achieves more.

ENROLLMENT--OCTOBER 1, 2003			
School/Grade	10-01-01	10-01-02	10-01-03
LUNENBURG PRIMARY SCHOOL:			
Pre-School	64	69	52
Kindergarten	115	118	108
Total - Primary School	179	187	160
T.C. PASSIOS ELEMENTARY SCHOOL:			
Grade 1	111	125	113
Grade 2	136	115	120
Grade 3	124	136	111
Grade 4	140	134	137
Total - T.C. Passios Elementary School	511	510	481
TURKEY HILL MIDDLE SCHOOL:			
Grade 5	147	142	142
Grade 6	161	150	147
Grade 7	165	153	148
Grade 8	132	153	154
Total - Turkey Hill Middle School	605	598	591
LUNENBURG HIGH SCHOOL:			
Grade 9	174	151	147
Grade 10	137	174	155
Grade 11	143	133	160
Grade 12	128	130	130
Total - Lunenburg High School	582	588	592
TOTAL ALL SCHOOLS*	1877	1883	1824
*TOTALS INCLUDE CHOICE AND SHIRLEY STUDENTS			

HIGH SCHOOL

Principal Michael Barney

Our community can continue to be proud of the accomplishments and hard work of our students throughout their school days in Lunenburg. With the MCAS assessment still drawing headlines across the state, we are proud to say that all of our seniors have passed the MCAS and proven competency and in fact our school was rated high performing in both Mathematics and English in our Cycle II rating by the state.

Our summer began with the first annual Lunenburg High School Alumni Golf Tournament to benefit the Athletic Department. We also had a group of volunteers including coaches, teachers and students renovate the boys locker room, creating a new team room and locker area. We are also grateful to the Lunenburg Track and Field Association and the volunteers behind them who will complete the beautiful new track and field for our community and our students this year. Your perseverance, vision and dedication to our young people are remarkable.

Students in our new Senior Transition Experience Program (STEP) have completed their first year and delivered their internship presentations. We're very pleased with the success of more than fifty seniors who participated in internships in various career areas, ranging from teaching to radio broadcasting to a 3-month leadership experience in Baja. The STEP program is quickly becoming a model for other schools because of the innovative way that our community is working together to provide better learning opportunities for students. We're grateful to all of the community partners for their support of this important new program.

We're very proud of Mrs. Karyn Giuliani and the members of our Students Against Destructive Decisions (SADD) chapter who were awarded a grant from the Mass. Governor's Highway Safety Bureau, the Executive Office of Public Safety, and the Office of Justice Programs. The grant funds will be used to provide awareness programs about underage drinking, impaired driving, and seat belt use. Thank you to Mrs. Giuliani for her initiative and foresight in seeking out this grant to address issues of critical importance to our students.

The LHS athletic tradition continued with kudos on several fronts. Our football team was recognized by Central Massachusetts with the Sportsmanship Award for 2003. Two of our freshmen girls cross country runners qualified for the state meet. Our Boys' winter track team brought home the league championship this season. The boys and girls basketball teams and hockey team advanced to tournament play. Beyond their winning records, we're particularly proud of the determination, maturity, and sportsmanship that all of our young men and women showed while they wore the blue and white of LHS. I'm certain the spring season will hold many more individual and team successes for our student athletes.

Once again, our music and art programs flourished, providing creative outlets for hundreds of our students. We again had many of our students recognized on the district and state level in band, chorus and in the Boston Globe Scholastic Art Awards. New extra-curricular organizations emerged this year as well, including a video club, broadcasting events on cable channel 8 as well as capturing major events on film for the archives. Our new mock trial team competed with some seasoned veterans in the area, defeating powerhouse St. Johns in a big trial, and our woodturning club "turned " out some beautiful pieces.

We also continued other great traditions at the high school, including the 38th annual Competitive Class Plays and Freshman Speech Competition as well as our Multicultural Festival, when our community comes together for a celebration of music, the arts, and the variety of cultures represented in our local area. The variety of food alone was worthy of the visit to LHS on that night.

We're proud of our students' accomplishments and thankful for the dedication of our teachers and the support of our community because that's what makes this good news possible.

FACULTY

Computer Science
Mr. Peter McCauliff

Band/Chorus
Ms. Caryn Katz

Industrial Technology
Mr. Mark O'Malley

Art
Ms. Karyn Giuliani
Ms. Heather Richardson

Mathematics
Mrs. Noreen Berry
Mrs. Nancy Weber
Mrs. Sarah Sabatini
Mr. Eric Short
Mr. Joseph Trodello
Mr. Robert Truax

World Languages
Mrs. Jeanne Alberti
Mrs. Kay Alverson-Hillman
Mrs. Sharon Kimball
Mrs. Kathleen McGuigan
Mrs. Peggy Proctor

Physical Education
Mr. Steven Boone
Mrs. Rhonda Malatos

Science
Mrs. Anne Adams
Mr. James Besarkarski
Ms. Claire Friedrich
Mrs. Dawn Gearin
Mr. Robert Hill
Ms. Joanne McQuaid, Greenhouse Mgr.
Mr. Peter Farmer

Special Education
Mrs. Julianna Bertram
Mrs. Bobbi Curtis
Mr. Scott Curtis
Mrs. Nicole Kromer
Mrs. Rita Maistrellis
Ms. Jessie Smith
Mr. Rocco Spagnuolo
Mrs. Carol Higgins
Mr. Timothy Leary
Mr. James Steele
Mrs. Donna Lee Duquette
Mrs. Susan Barney
Mrs. Susan Galvin
Custodial Staff
Mr. Timothy DeBettencourt, Head Custodian
Mr. Gene LeBlanc
Mr. Joel Underwood

Administration
Mr. Michael Barney
Mr. Greg Smith
Mrs. Sheila Szocik
Mrs. Karen Moore

English
Mrs. Martha Cheesman
Ms. Mary Foyle
Mr. Michael Hannigan
Ms. Zarin Reynolds
Mrs. Mariam Cronin
Ms. Erinanne Snyder

Guidance
Mr. William Hicks
Mrs. Karma Tousignant
Mrs. Debra Aro, Registrar/Secretary

Health/Human Development
Mrs. Alexis Pukaite (maternity leave)
Mrs. Cynthia Brown
Library Media Specialist
Mrs. Pamela Vallee
Mrs. Suzanne Takvorian
Social Studies
Mr. Fred Crellin
Ms. Lauren Barbero
Ms. Anna Keegan
Mr. Timothy Normandin
Mr. Joshua Romano (military leave)
Ms. Jane Whitney

Director of Athletics
Mr. Steven Boone

School Nurse
Mrs. Carolyn Finch

Supervisor of Buildings and Grounds
Mr. John Londa
Career Development
Mr. Steven Marini, STEP Coordinator

School Lunch Program
Mr. Kevin Richardson, Director
Ms. Faith Tassos, Manager
Mrs. Carol Hamilton
Mrs. Kathleen Connolly
Mrs. Eleni Tsiakalos
Mrs. Joan Hirsch

Principal
Assistant Principal
Administrative Secretary
Secretary

TURKEY HILL MIDDLE SCHOOL

Principal Keith Hochstein

Despite reductions in programs due to budget cuts, Turkey Hill Middle School had a terrific year during 2003-2004. There are a variety of reasons for this statement; some of these relate to the academic success of our students and some are due to the way our students interact in the building and the opportunities that students have to enjoy their middle school years.

First our MCAS scores indicate that once again the academic program is strong and students are benefiting from improved programs and improved teaching. In the fifth grade our students took the Science and Technology test for the first time these scores were reported by the DOE. 62% of our students obtained an Advanced or Proficient rating compared to 51% at the state level. Only 4% of our students were in the Warning category compared with 15% at the state level.

In the sixth grade all students take the Mathematics test. 66% or two-thirds of our students scored in the Advanced or Proficient categories versus 42% at the state level. In addition only 12% of our students obtained a Warning category versus 26% at the state level.

In seventh grade all students take the English/Language Arts test. 71% of our students scored in the Advanced or Proficient categories versus 65% at the state level. Even more importantly only 2 of our students or 4% obtained a Warning category versus 7% at the state level.

In eighth grade students take both the Mathematics test and the Science and Technology Test. In Mathematics 46% of our students scored in the Advanced/Proficient categories versus 37% at the state level and 17% obtained a warning versus 33% at the state level. In Science and Technology 51% of our students scored in the Advanced or Proficient categories versus 32% at the state level and only 13% obtained a Warning category versus 31% at the state level.

What do all of these statistics mean? There is no doubt that we expect to do better than the state average. However, in almost every category we are 10 percentage points or more above the state averages and some were even higher. Also of importance were the low numbers of students in the Warning category versus the state numbers.

One other aspect of these scores that is important is called Adequate Yearly Progress (AYP). The DOE tells us that regardless of where any public school system falls in relation to state scores, every system must make "adequate yearly progress." Knowing that one class of students may be better than another, the DOE rates all systems every two years in this manner. They can compare how much progress each system has made vis a vis how much they expect the system to make. This is the most important ranking. So far Turkey Hill Middle School has exceeded our AYP expectations. The scores that we obtain this spring will be averaged with last year's scores to tell us whether or not we have again exceeded state expectations. Our goal will always remain to exceed state averages.

These results occur because of dedicated and professional teachers, and Turkey Hill Middle School is blessed with many such teachers. In addition, the improved scores are a reflection of the ongoing, high-quality professional development that is a trademark of the Lunenburg Public Schools. Our staff has embraced a number of new professional development initiatives. Our "Results" philosophy continues to grow. One faculty meeting each month, all teachers meet in subject-area teams to discuss student work, test scores and other information related to academic progress. As a result, teachers plan strategies focused around how to improve academic performance. These meetings provide valuable time for teachers to reflect on their teaching, to plan joint activities and to improve student learning.

Teachers also engaged in a number of other activities. At several faculty meetings this year, the faculty met to discuss the new mission of the Lunenburg Public Schools that is found in the District Improvement Plan. An important part of this mission is the development of students who are "life-long learners". Teachers met to discuss and initiate strategies that would help our students achieve this goal. Today's students will face a variety of changes in jobs and job requirements, so it is essential that they understand how to be a continuous learner. Through the office of Professional Development, all staff continued to be trained in a teaching philosophy called Understanding by Design. Through this effort, teachers explored the enduring understandings and essential questions related to their subjects. Teaching in this way encourages students to develop the fundamental concepts related to all subjects and thus be better able to analyze, retain and use knowledge. Lastly teachers continued their efforts to "map" their curricular areas thus reducing gaps and repetitions and ensuring that all students are provided a high-quality learning experience.

The other half of our school mission is to provide an environment that is enjoyable and safe for our students. This is accomplished through a variety of activities. The student government programs do a great deal. Our 5th/6th grade group runs activities such as pumpkin painting, ice cream socials and video with pizza parties. They also run field trips to The Nutcracker, Roll-on America, snow tubing, and Galactic Bowling. Our 7th/8th grade group runs all the dances, homeroom spirit contests, dress up days for students and raising money for charity. Another new initiative this year was the school store that the 7th and 8th grade student government started. It is an initiative that students organize and operate; they make many of the decisions related to purchasing, pricing, promoting and sales. What a great way to learn about business and responsibility. The school continues to provide students the chance to join our Community Service Organization. This is another terrific opportunity for students. They plan and organize charitable events in which they raise money for the less fortunate. Again a wonderful chance for students to learn about the joy of helping others. Our student run yearbook, the ski/snowboarding program, track programs and many other activities provide a variety of offerings for involvement on the part of our students.

It is the hope of the administration and faculty that the citizens of Lunenburg are pleased with how THMS continues to service students academically and provide for them personally.

TURKEY HILL MIDDLE SCHOOL STAFF

OFFICE
Keith Hochstein, Principal
Christopher Casavant, Asst. Principal
Dawn de Freitas, Secretary
Susan Glenny, Nurse

GUIDANCE
Cheryl Nelson
Phil McMurray
Kristin Mackay

SPECIAL AREAS
Steve Archambault, Music
Lynn Major, Health
Nancy Karls, Consumer Science
Robin Warren, Art
Dale Diamantopoulos, P.E.
Sandra Laserte, P.E.

FOREIGN LANGUAGE
Julian Johnson, Spanish
Lynn Radford, French/Spanish
Tamara Yourk, Latin

LIBRARY
Denise Galloway
Sheila Hayward

LEARNING CENTER
Timothy Santry
Linda Papadopoulos
Nancy Halleran
Sharon McCullah
Marlene Wilta
Vivian Butler
Judy Pierce
Mark Arsenault
Nancy Corey
Sherri Borreson

FIFTH GRADE
Susan Petrowicz,
Maura Lizek,
Robert Bourque,
Susan Reardon
Rhonda Connery
Danielle Thompson

SIXTH GRADE
Ellen Gillham
Roger St. Jean
Heidi Champagne
Dana Belair
Kristine Bassett
Jeffrey Cournoyer

SEVENTH GRADE
Tim Sheasgreen
Joanne Deming
Sandralee Turner
BJ Carbone
Natalie Davulis
Chad Adams

EIGHTH GRADE
Mary Whitaker
Martha Sullivan
Jennifer Biker,
Meredith Hertel
Linda Collette
Paul Romano

TITLE I
Jerianne Kelley
Valerie Spotkill

CAFETERIA
Sue Deming, Manager
Claudette LaChance

Beth Chaplin
Donna Lavole
Nancy Erb

ACHIEVE PROGRAM
Inez Brunell
Cathy Cameron
Tina Stateler

Amy Leet
Sheryl Ewen
Joan Newell

CUSTODIAL
Geri Sampson, Head Custodian
Charles Swift
Renald Meyer

THOMAS C. PASSIOS ELEMENTARY SCHOOL

Principal Cynthia Daukantas

The Thomas C. Passios Elementary School continues to strive toward educating the total child. We utilize a variety of instructional methods and modalities in our approach to meet the individual needs of every child. We believe that the success of our programs is dependent upon a healthy and productive partnership between home and school. Toward that end, parents play an active role in many of the daily programs and routines of their child's educational program.

This year continues to be a challenging and exciting year for the students, faculty, and staff of both the Elementary and Primary Schools. With a combined enrollment of six hundred forty-five students, class sizes range from nineteen to twenty-three, with the younger children benefiting from somewhat smaller class sizes.

The summer of 2003 proved to be very beneficial to many children in Lunenburg. Again we were able to offer a number of extended learning opportunities to children: a five week program for children with special needs in grades preschool through grade 4, and a five week program for a limited number of children in Grades 1-4 who were experiencing difficulty in the areas of reading and math. Funding for the Grades 1 and 2 programs was provided through School Linked Services; State Academic Support grant monies supported the Grade 3 and 4 program.

As the Elementary School continues to analyze our students' results on the Massachusetts Comprehensive Assessment System (MCAS) and revise curricula and instructional strategies, we continue to grow as an excellent educational facility. We are extremely proud of the work we undertake each year. As teachers reflect on their teaching practice, students benefit.

This year is particularly important for TC Passios. It is the 50th anniversary of the opening of the school. With this milestone in mind a celebration/recognition will be held late May or early June of this year. Parents and community members are invited to attend and participate. We will keep everyone informed as plans develop.

This year the Elementary School Improvement Plan focused on the areas of English Language Arts for students with disabilities and those receiving Title I support and Math for all students including those with disabilities and receiving Title I support. At this point in the year, the School Council is proud that we have accomplished many of our goals. On all professional development half days, Mrs. Judy Hall, educational consultant, has provided training in the new Everyday Math Program to all teachers and support staff in grades K-4. In addition to our release day workshops, fifteen teachers at the K-4 level participated in a math course held on Saturdays throughout the year.

To monitor student progress, the Elementary School has implemented DIBELS (Dynamic Indicators of Basic Early Literacy Skills) for all kindergarten students this year. This assessment monitors student progress in various literacy areas determined critical for literacy proficiency: initial sound fluency, letter naming fluency, phoneme segmentation fluency, and nonsense word fluency. Our intent will be to implement the DIBELS next fall in Grade 1. Using DIBELS all children are evaluated in the fall, at mid-year, and again at the end of the year. Students scoring in the risk category are provided additional instruction with the teacher, as well as an opportunity to use the Lexia Early Literacy Computer Program on a regular basis to reinforce concepts.

To support reading instruction a Literacy Team is being created at the elementary school. This team attended a four-day training workshop at Lesley University in March/April of this year. Representatives of grade levels from kindergarten through grade 3 serve on this team. Our intent will be for this Literacy Team to oversee reading instruction and to provide professional development to all teachers in grades preschool through grade 3 next year.

As we move closer to the completion of the new primary school, discussion with the faculty revolve around our vision for a new pre-k through two school, and involve scheduling, transportation, playgrounds, room assignments, and specialists. A transition team, representative of the affected grade levels, meets regularly to discuss these building issues. A survey regarding playground ideas was distributed to all parents earlier this year, resulting in several sites the playground committee will visit.

The Passios Elementary School Council meets the first Tuesday of every month to discuss school issues and to develop its annual School Improvement Plan. Parents and community members are welcome to attend. Members of the Council for the 2002 – 2003 school year are:

Principal:	Cyndy Daukantas
Teachers:	Sue Cavaioli, Debra Cleaves, and Judy Moodie
Parents:	Brent Benson, Lisa Booth, Sharon Cronin, and Kelly Hansel
Community Representative:	open
School Committee Rep:	Dr. Greg Berthiaume

THOMAS C. PASSIOS ELEMENTARY SCHOOL FACULTY

Principal:	Cynthia Daukantas	Learning Center:	Gail Wolejko
Adm. Sec.	Ann Brisson		Jane Murray
Guidance:	Susan Cavaioli		Christine James
Nurse:	Mary Gile/ Rebecca Lantry (TCP)		Pam Hill (Pri.)
	Sharron Massie / Rosemary Sullender	Reading Specialist:	Nancy Rahaim
Preschool:	Sherrie Flynn		Judith Mood
	Judith Wood	Art:	Lori MacDougall
Kindergarten:	Lisa Stone	Music:	Maribeth Ford
	Deborah Harrigan	Library:	MaryAnn Welsman
	Deborah Zivojinovic	Phys. Ed.:	Steve Kyajohnian
Grade 1:	Michael Courtemanche		Genevieve Nass
	Barbara Nelson	Occup. Therap:	Pam Sparling
	Joanne Londa	Speech/Language:	Jacqueline Stanton
	Nicole Elliott		Catherine Zayka
	Diane Nowd		Pat Krysiak (Pri.)
	Sara Kenney	Title I (Fed. Grant):	Ann Carolan
Grade 2:	Vicki Barbier		Judith Barone
	Debra Cleaes		Amber Tucker
	Diane Riley		
	Maria Courtemanche	Cafeteria:	Laura Veillette, Mgr.
	Jean Jones		Judy Haley
	Nancy Chapdelaine		Patti Pichnarcik
Grade 3:	Susan McHale		Becky deBettencourt
	Janet Marshall	Custodians:	Vincent Cannava
	Susan Diamantopoulos		Al Carlson
	Mary Lynn Conrad		Chuck Swift (Pri.)
	Amy Harrington		
Grade 4:	Donna Dufour		
	Jeff O'Neill		
	Larry Bennett		
	Carolyn Brochu		
	Judith Schenck		
	Karen Rash		

SPECIAL SERVICES REPORT

Elaine E. Blaisdell, Student Services Coordinator

Lunenburg regular and special educators together take pride in their ability to provide equal access to the curriculum for all of our students. We have worked together to develop Individual Educational Plans that are both challenging and provide our

students with the necessary specialized instruction for them to be successful. There are currently two hundred and forty-five (245) students in the town of Lunenburg that received some form of special education or related service. This represents 13 % of our total student population. This percentage is consistent to the national average and less than the state average of 15 % of the total students only eight students receive services outside the district during the 2003/2004 school year.

Our efforts this year have focused on expanding our services to support students with low incidence disabilities to access the curriculum in our local schools. In the absence of such options these students would require more restrictive out of district placements. During the 2003/2004 school year we expanded services in the preschool program and in our high school. We believe, as the law states, in Lunenburg that we need to provide students with special needs every opportunity to attend the same schools as their non-disabled peers. The staff worked hard to look at the existing resources and utilize existing staff where possible to meet the needs of these students. These services were necessary to the students and parents, provided minimal impact to the current budget, and were cost effective.

Another area the district has been focused on this year is improving for students with disabilities performance on MCAS. This is the first year that the state is reporting Adequate Yearly Progress for districts across the Commonwealth. Many districts are struggling with less than stellar results in the sub group portions of the reports. We have achieved the adequate yearly progress on the MCAS necessary for students with disabilities at the middle and high school level. At all levels we are working through our Results Teams to ensure that students with disabilities continue to make adequate yearly progress on the MCAS by developing strategies that improve students performance.

We continue to have high participation by our Special Services Staff in professional development opportunities presented both in and out of the district. Several opportunities were available for the staff focusing on disabilities, improving reading and developing strategies to improve Math skills.

The Lunenburg Schools take great pride in our ability to provide a variety of services to meet the various needs of our students. We have an experienced hard working staff that work together with parents and classroom teachers to provide these services. Our parents continue to be equal partners in our efforts to develop challenging and focused educational plans for students.

For more information contact Elaine Blaisdell at the Special Services Office at 978-582-4114

INSTRUCTIONAL SERVICES DEPARTMENT

Karen Martin, Director

During this past year the Instructional Services office continued to focus on three areas critical to the District's mission: (a) curriculum development, (b) assessment and evaluation (measures), and (c) continuous improvement for ALL. Following is a summary of activities and results in each of these areas.

STANDARDS

The English/Language Arts curriculum has been in the review and alignment process for a year and a half. The committee has worked diligently to ensure all aspects of an ELA program are addressed in relation to the standards and have developed additional support materials for teachers. A revised curriculum will be presented to the school committee in June. The History/Social Studies curriculum recently began the process of realigning with the state frameworks and will be present a revised curriculum to the school committee in September 2004. Teams of teachers with grade level representation are reviewing the newly adopted state frameworks and are involved in developing a local curriculum that captures enduring understandings, exemplary teaching practices and useful resources. In September, Technology will be the focus of a yearlong curriculum development process.

MEASURES

The sixth administration of the Massachusetts Comprehensive Assessment System (MCAS) took place in the spring of 2003. In Lunenburg 96% met the required benchmark for graduation in Mathematics and 93% of 10th grade students met the required benchmark for graduation in English/Language Arts. Overall, eighty-five percent (85%) of 10th grade students passed both required tests. Forty students (31%) met the performance criteria to apply for the Stanley Z. Koplik Certificate of Mastery.

Competency Determination Results- Spring 2003

Passed Both English Language Arts and Mathematics	138 students	85%
Passed Only English Language Arts	11 students	7%
Passed Only Mathematics	6 student	4%
Not Yet Passed Both English Language Arts & Mathematics	8 students	5%

Currently all seniors have met the competency determination for graduation. After the December retakes one junior needs to meet the ELA competency and five juniors need to meet the math competency. Ongoing academic support is provided for all students who have not met competency and support is being provided for all sophomores at risk.

On the MCAS, student performance is reported by level (Advanced, Proficient, Needs Improvement, and Warning). Students at the Advanced Level (260-280) demonstrate a comprehensive and in-depth understanding of rigorous subject matter and provide sophisticated solutions to complex problems. Students at the Proficient Level (240-259) demonstrate a solid understanding of challenging subject matter and solve a wide variety of problems. Students at the Needs Improvement Level (220-239) demonstrate partial understanding of subject matter and solve some simple problems. Students at the Warning Level (200-219) demonstrate minimal understanding of subject matter and do not solve even simple problems. In grade 3 results are reported in only three categories, Proficient, Needs Improvement, and Warning.

The following tables summarize the performance of the Lunenburg students in each area across the various grades tested:

Reading

	Performance Level					
	Proficient		Needs Improvement		Warning	
	Lunenburg	State	Lunenburg	State	Lunenburg	State
Grade 3	76%	63%	22%	30%	2%	7%

English Language Arts

	Performance Level							
	Advanced		Proficient		Needs Improvement		Warning	
	Lunenburg	State	Lunenburg	State	Lunenburg	State	Lunenburg	State
Grade 4	14%	10%	46%	45%	37%	34%	3%	10%
Grade 7	2%	8%	69%	57%	25%	28%	4%	7%
Grade 10	24%	20%	54%	41%	16%	28%	6%	12%

Mathematics

	Performance Level							
	Advanced		Proficient		Needs Improvement		Warning	
	Lunenburg	State	Lunenburg	State	Lunenburg	State	Lunenburg	State
Grade 4	9%	12%	36%	28%	47%	43%	8%	16%
Grade 6	31%	16%	35%	26%	22%	32%	12%	26%
Grade 8	11%	12%	35%	25%	37%	30%	17%	33%
Grade 10	35%	24%	33%	27%	22%	28%	10%	21%

Science and Technology/Engineering

	Performance Level							
	Advanced		Proficient		Needs Improvement		Warning	
	Lunenburg	State	Lunenburg	State	Lunenburg	State	Lunenburg	State
Grade 5	10%	18%	52%	33%	34%	34%	4%	15%
Grade 8	10%	4%	41%	28%	36%	37%	13%	31%

CONTINOUS IMPROVEMENT FOR ALL

The No Child Left Behind legislation provides an opportunity to carefully examine performance results for all students. Every district in the nation received Annual Yearly Progress results for this mid-cycle. The Lunenburg High School and Turkey Hill Middle School met AYP goals in English/Language Arts and Math for all students (the aggregate) and for our subgroups (special education students, free-reduced lunch, and Title I). T.C. Passios met AYP in Math for all students and for all subgroups. In English/Language Arts the AYP was met for Title I and free and reduced lunch student but not for special education students. This data helps guide the school councils, administrative team and Results teams to plan for appropriate interventions, programming and professional development.

Ensuring all students improve requires a coherent and comprehensive plan that continually supports school structures and collaboration focused on student learning. Results Teams, Understanding by Design Training, our professional development program, the new teacher induction program and continuous review of programs all support student learning.

Results Teams meet one time per month during faculty meeting time. The teams use data to set goals, plan teaching strategies and assess the results. This process ensures a regular review of student performance and effective teaching strategies.

A majority of our teachers have been trained in Understanding by Design. This assessment process focuses on developing assessments to improve student performance. Through ongoing analysis of student results, refinement of units and increased awareness of effective assessments and instructional practices, student performance will improve. The UBD units provide additional measures in non- MCAS subjects and provide additional curriculum materials for new teachers.

Ongoing and sustained professional development continues in a range of areas. This year graduate level courses were offered in Understanding by Design, Teaching Smarter, Standards-based Mathematics, Differentiating Math Instruction, Enduring Historical Understandings, The Teenage Culture, Teacher as Researcher, Habits of Effective Teachers and Reading Comprehension.

This year Title I services have expanded to include a part-time math specialist and an extended day program. Additional math support is provided in classrooms at T.C. Passios and the Turkey Hill Middle School. The extended day program provides additional time on learning for Title I students. Technology integration specialist provides a range of technology workshops and support building level technology initiatives.

Our new teacher induction program provides ongoing support for new teachers to the district. New teachers participate in a two-day orientation, have a trained mentor and receive peer coaching during a three-year process. New teachers participate in professional development focused on skills and strategies needed for beginning teachers.

SUMMARY

The Instructional Services Office has a strong partnership with the individual schools, administrative team, faculty and community. The combined and integrated efforts of all parties ensure continued focus on improving student performance. The Office of Instruction strives to provide teachers, administrators, students and the community with the necessary data, educational research, professional development, support and resources needed to improve student performance.

For additional information on any of these topics, please contact Karen Martin, Instructional Services Director at 978-582-4118 or e-mail kmartin@lunenburgonline.com.

FACILITIES DIRECTOR

John Londa, Director

The focus of the school maintenance effort for FY04 was renovations to heating systems at Turkey Hill Middle School and heating and ventilation system renovations at the Passios Elementary School and Lunenburg High.

A $313,000 renovation project for the Turkey Hill Middle School heating system was completed in September 2003. A federal grant for $178,000 helped to reduce the cost to the town. An additional grant of $7,700 from the State Department of Revenue further reduced costs for removing the 10,000-gallon underground fuel tank. Norian/Siani Engineers Incorporated of Waltham, MA designed the renovation project and Dillon Boiler Service Company of Fitchburg was awarded the contract for the work. The scope of the project included removing the two existing boilers, underground fuel tank, domestic hot water tank and heater and circulation pump. Replacement equipment included high efficiency gas fire boilers.

A $1,550,000 renovation mechanical upgrade project for the Passios Elementary School and Lunenburg High School, which began in July 2003, is expected to be completed in March 2004. The project is being funded from an appropriation approved at the May 2003 town meeting and election. Dillon Boiler was the low bidder for the project and was awarded the contract for the work. The scope of the project included replacing two 50-year-old boilers, conversion from steam to hot water boilers, replacement of the domestic hot water systems and heating control system for both schools. At Passios Elementary School, the project included replacement of heat circulation pumps, cafeteria unit ventilators and air handlers for the teacher lunchroom and the Learning Center. At Lunenburg High School the project included replacement of the high school gym and auditorium air handlers as well as air conditioning for the auditorium and replacement of all classroom unit ventilators. The large scope of this project made coordination of the renovation effort while continuing to support full use of the building a challenge. The faculty, students and the general contractor worked together to ensure this important project continued to move forward to completion.

In Fiscal Year 05, the focus of capital maintenance will be prepare a energy performance contract proposal for all schools. Particular emphasis will be to upgrade lighting at all buildings to high efficiency lighting.

A multiyear program to bring all schools up to compliance with the Americans with Disabilities Act continues to suffer from a lack of funding and will likely stretch into FY06.

The Lunenburg Track and Field Athletic Association continued site preparation for the building of a soccer and track facility between the High School and the Middle School. Work is on going on an astro turf like playing surface for the field.

At the Primary School, the age of electrical wiring and condition of the heat distribution system at the Primary School remain a constant concern. Leaking condensation return lines for the heating system required numerous highly disruptive minor repairs. Construction of the new Lunenburg Primary School continues at 1401 Massachusetts Avenue. Future uses for the current Primary School continue to be studied.

BOARD OF ASSESSOR'S ANNUAL REPORT

Fiscal 2003 Assessments and Revenues by Major Property Class

Property Class	Levy Percent	Valuation by Class	Tax Rate	Tax Levy
Residential	90.9714	841,292,300	13.12	11,037,754.98
Open Space	0.0146	135,100	13.12	1,772.51
Commercial	5.6785	52,514,100	13.12	688,984.99
Industrial	1.7297	15,996,300	13.12	209,871.46
Personal Property	1.6058	14,849,700	13.12	194,828.06
TOTALS	100.0000	924,787,500	13.12	12,133,212.00

Valuation and Tax History

Fiscal Year	Tax Rate	Total Valuation	Accounts	Tax Levy	Change(%)
2003	13.12	924,787,500	4,632	12,133,212.00	5.1509
2002	15.60	739,669,900	4,545	11,538,850.44	7.1528
2001	15.95	675,146,400	4,477	10,768,585.08	6.2812
2000	16.62	609,637,000	4,380	10,132,166.94	6.4079
1999	17.80	534,944,000	4,319	9,522,003.20	2.9776
1998	18.16	509,178,000	4,282	9,246,672.48	1.8058
1997	18.46	492,018,250	4,286	9,082,656.90	14.4159
1996	16.60	478,209,871	4,272	7,938,283.86	6.9509
1995	16.03	463,029,370	4,222	7,422,360.80	

Fiscal Year 2002 Abstract of Assessments

Property Class Code/Description	Accts	Class Valuation	Avg.Value
012 – 043 Mixed Use Properties	79	23,533,300	297,900
101 Residential Single Family	3,249	739,269,100	227,600
102 Residential Condominiums	95	17,743,500	186,800
104 Residential Two Family	105	23,004,000	219,100
105 Residential Three Family	6	1,459,000	243,200
Miscellaneous Residential	43	11,337,200	263,700
111 – 125 Apartments	5	1,405,100	281,200
130 – 132, 106 Vacant Land	459	27,016,900	58,860
200 – 231 Open Space	1	135,100	135,100
300 – 393 Commercial	132	48,521,800	367,600
400 – 442 Industrial	22	15,996,300	727,100
501 – 506 Personal Property	411	14,849,700	36,100
600 – 821 Chapter 61, 61A, 61B	25	516,525	20,700
TOTALS	4632	924,797,500	

Assessor's Account for Exemptions and Abatements

Description	FY2003	FY2002	FY2001	FY2000
Assessor's Overlay	92,035.55	102,946.08	156,322.39	84,281.17
Charges to 6/30/2003	67,064.06	98,446.88	70,353.60	73,780.19
Potential Liability	10,000.00	-0-	-0-	-0-
Amount Released	-0-	-0-	60,280.35	6,086.05
Balance	14,971.49	4,499.20	25,688.44	4,414.93

New Growth Revenue

Fiscal Year	Added Valuation	Tax Rate	New Revenues	Change(%)
2003	20,190,107	15.60	314,966	-0.1119
2002	19,769,200	15.95	315,319	-4.38
2001	19,842,600	16.62	329,783	14.86
2000	16,130,842	17.80	287,129	31.62
1999	12,012,200	18.16	218,142	18.37
1998	9,983,300	18.46	184,292	13.77
1997	9,758,366	16.60	161,989	-50.87
1996	20,569,309	16.03	329,726	65.63
1995	13,105,604	15.19	199,074	-0-

Lunenburg Board of Assessors

Paul M. Dickey, Chairman
Christopher M. Comeau, Member
Fred J. Liatsis, Member
Barbara Lefebvre, Administrative Assessor
Harald Scheid, Regional Tax Assessor
Dorothy Musgrove, Principal Clerk

TOWN OF LUNENBURG, MASSACHUSETTS
COMBINED BALANCE SHEET
ALL FUND TYPES AND ACCOUNT GROUPS
FOR THE YEAR ENDED JUNE 30, 2003

	GENERAL FUND	SPECIAL REVENUE FUND	CAPITAL PROJECT FUND	FIDUCIARY FUND TYPES TRUST and AGENCY	ACCT. GROUP GENERAL LONG-TERM DEBT
CASH and CASH INVESTMENTS	$1,883,553.36	$1,131,586.49	$15,098,191.35	$1,471,676.63	
RECEIVABLES:					
FY 04 PRELIMINARY TAXES					
FY 03 REAL ESTATE TAXES	$533.78				
FY 02 REAL ESTATE TAXES	($20.47)				
ALLOW ABATE/EXEMPTIONS	($58,630.28)				
PERSONAL PROPERTY TAXES	$26,667.42				
ROLL BACK TAXES	$22,005.90				
TAX LIENS	$467,265.35				
EXCISES	$87,643.25				
OTHER	$225,843.36				
STREET BETTERMENTS	$108,693.10				
WATER BETTERMENTS DUE	$148,513.45				
WATER DISTRICT					
DUE FROM TRUST FUNDS/SRF	$19,807.01				
DUE FROM GENERAL FUND		$10,400.00		$2,767.96	
DUE FROM COMM OF MASS-TRANSPORTATION	$97,163.00				
AMOUNT TO BE PROVIDED FOR					
RETIREMENT OF GENERAL					
LONG TERM DEBT					$22,121,018
TOTAL ASSETS	$3,049,336.23	$1,141,986.49	$15,098,191.35	$1,474,444.59	$22,121,018
LIABILITIES and FUND EQUITY:					
LIABILITIES:					
WARRANTS PAYABLE	$304,396.26	$31,541.24	$433,099.46	$400.00	
ACCRUED SALARIES	$467,967.16	$69,890.05	$4,036.48		
BONDS PAYABLE					
BANS PAYABLE					
EMPLOYEES' WITHHOLDINGS PAYABLE	$6,057.33				
OTHER LIABILITIES and					
ACCRUED EXPENSES	$12,296.31				
DEFERRED REVENUE	$1,048,814.86				
DEFERRED REVENUE FY 04 PRELIM					
DUE TO TRUST FUNDS/SRF	$13,167.96				
DUE TO WATER DISTRICT	$42,795.23				
DUE TO GENERAL FUND		$1,200.00		$18,607.01	
GENERAL OBLIGATION					
LONG TERM DEBT					$22,121,018
TOTAL LIABILITIES	$1,895,495.11	$102,631.29	$437,135.94	$19,007.01	$22,121,018
FUND BALANCES:					
RESERVED FOR ENCUMBRANCES	$167,323.39				
RESERVED FOR FUTURE DEBT-PREMIUM	$203,128.00				
RESERVED EXTRAORDINARY					
RESERVED FOR EXPENDITURES	$15,000.00				
RESERVED FOR ENDOWMENTS				$609,064.67	
AUTH DEFERRAL TEACHERS PAY	($144,863.00)				
OVER/UNDER ASSESSMENTS					
APPROPRIATION DEFICITS	($102,972.23)				
REVENUE DEFICIT					
UNPROVIDED ABATE/EXEMPTIONS					
UNRESERVED:					
DESIGNATED					
UNDESIGNATED	$1,026,226.96	$1,039,355.20	$14,661,055.41	$846,372.91	
TOTAL FUND EQUITY	$1,153,843.12	$1,039,355.20	$14,661,055.41	$1,455,437.58	
TOTAL LIABILITIES/FUND EQUITY	$3,049,338.23	$1,141,986.49	$15,098,191.35	$1,474,444.59	$22,121,018

FY 2003 RECEIPTS JUNE 30, 2003

TAXES & EXCISES:					
PERSONAL PROPERTY TAXES	$195,792.60	BID CHARGES	$25.00	SALE OF TOWN PROPERTY	$190,387.26
REAL ESTATE TAXES	$11,754,274.29	CONSERVATION COMM RECORDING FEES	$1725.00	SALE OF BOND	$237,822.39
TAX LIENS REDEEMED	$270,289.90	FORM OF INTENT-BUSINESS	$675.00	INTEREST SALE OF TAX TITLE	$21,050.83
ROLL BACK TAXES	$20,874.38	RENTAL FEES CELL TOWER	$22000.00	MISC. REVENUE	$10,419.14
PAYMENT IN LIEU OF TAXES	$19,417.05	STREET LISTS	$330.00		
MOTOR VEHICLE EXCISE	$1,167,445.29	VOTING LISTS	$55.00	EARNINGS ON INVESTMENTS:	
CLASSIFIED FOREST TAX	$10.40	HISTORY BOOKS	$200.00	INVESTMENT INCOME	$47,891.66
		PRIOR YEAR REFUNDS	$1,020.04		
INTEREST:		GENEALOGY SEARCH	$25.00	PRIOR YEAR EXCISE	$1,598.25
INTEREST PERSONAL PROPERTY	$683.48	DISHONORED CHECK FEE	$505.00	PRIOR YEAR INT/DEMAND	$1,134.95
INTEREST REAL ESTATE	$19,399.51	COBRA FEES	$243.03		
INTEREST MOTOR VEHICLE EXCISE	$4,054.42	POSTAGE REIMBURSEMENT	$5.34	TRANSFER FR SEWER BETTERMENT FD	$120,443.00
DEMANDS:		LICENSES/PERMITS:		SUMMARY OF RECEIPTS	
DEMANDS MOTOR VEHICLE EXCISE	$12,499.00	ALCOHOLIC BEVERAGES	$22,964.92		
DEMANDS REAL ESTATE	$2,194.00	MARRIAGE LICENSES	$735.00	TAXES & EXCISES	$13,559,560.04
DEMANDS PERSONAL PROPERTY	$580.00	HEALTH LICENSES	$935.00	FEES	$815,787.38
		SELECTMEN'S LICENSES	$8,125.00	LICENSES AND PERMITS	$187,088.42
PENALTY/INTEREST TAX LIENS	$89,312.52	GASOLINE LICENSES	$540.00	STATE REVENUE	$4,251,585.05
		DOG LICENSES	$12,215.00	SPECIAL ASSESSMENTS	$40,593.01
FEES:		WIRING PERMITS	$24,550.00	FINES & FORFEITS	$37,815.00
POLICE REPORT FEES	$1,173.00	GAS PERMITS	$7,664.00	INVESTMENT INCOME	$47,891.66
FIRE REPORT FEES	$41.00	PLUMBING PERMITS	$12,938.00	TRANSFER FR SEWER BETTERMENT FD	$120,443.00
FISH & GAME FEES	$437.30	BUILDING PERMITS	$88,091.50	NON RECURRING REVENUE	$449,260.48
SPECIAL DETAIL ADMIN. FEES	$755.00	WOODSTOVE PERMITS	$240.00		
MUNICIPAL LIENS	$32,151.00	FIRE PERMITS	$3,785.00	GRAND TOTAL	$19,060,763.56
CERT COPY BIRTH, DEATH, MARRIAGE	$2,121.00	POLICE PERMITS	$1,925.00		
BUSINESS CERTIFICATE	$1,090.00	RAFFLES & BAZAARS	$80.00		
RESIDENCY CERTIFICATE	$15.00	EARTH REMOVAL PERMITS	$1,900.00		
UCC FILING FEES	$983.27	ROAD OPENING PERMITS	$400.00		
POLE LOCATION	$80.00				
CERTIFICATE OF INSPECTION	$700.00	STATE REVENUE:			
CABLE T.V.	$1,298.50	STATE OWNED LAND	$18,793.00		
RELEASE FEES	$912.00	VETERANS	$8,875.00		
SEALING FEES	$401.00	SURVIVING SPOUSES	$1,750.00		
PRE-SCHOOL TUITION	$36,751.50	BLIND ABATEMENT	$788.00		
RENTAL JONES HOUSE	$4,800.00	ABATEMENTS ELDERLY	$45,855.00		
LOCK UP FEES	$500.00	POLICE CAREER INCENTIVE (QUINN)	$33,898.00		
		CH 70 SCHOOL AID	$3,650,152.00		
DEPARTMENTAL REVENUE:		SCHOOL CHOICE/CHARTER ASSESSMENT	($609,922.00)		
SUBDIVISION RULES & REGS.	$600.00	SCHOOL TRANSPORTATION	$97,163.00		
MEDICAID REIMBURSEMENT	$42,245.26	SEC 2D CH 29 LOTTERY, BEANO	$1,003,985.00		
ZONING BYLAWS	$1,500.00	VETERANS BENEFITS	$248.05		
FORM A FILING FEES	$3,300.00				
PLANNING BD. FEES & CHGS.	$3,155.00	TRAILER PARKS	$15,552.00		
ZONING MAPS	$4.00	RESCUE WAGON	$156,346.00		
WETLANDS BYLAWS	$5.00	STREET BETTERMENTS	$13,811.32		
ZONING BOARD FILING FEES	$3,318.00	ST. BETTERMENT INT.	$11,229.69		
WETLANDS FILING FEES	$14,837.50				
WETLANDS ADVERTISING	$2,800.00	FINES & FORFEITS:			
CEMETERIES BURIALS	$8,500.00	PARKING FINES	$800.00		
TOWN BYLAWS	$20.00	COURT FINES	$31,215.00		
COPIER FEES	$6,192.64	DOG FINES	$5,800.00		
PAYPHONE FEES	$41.38				
CEMETERY OVERTIME FEES	$2225.00				

GENERAL FUND REVENUES FY 03

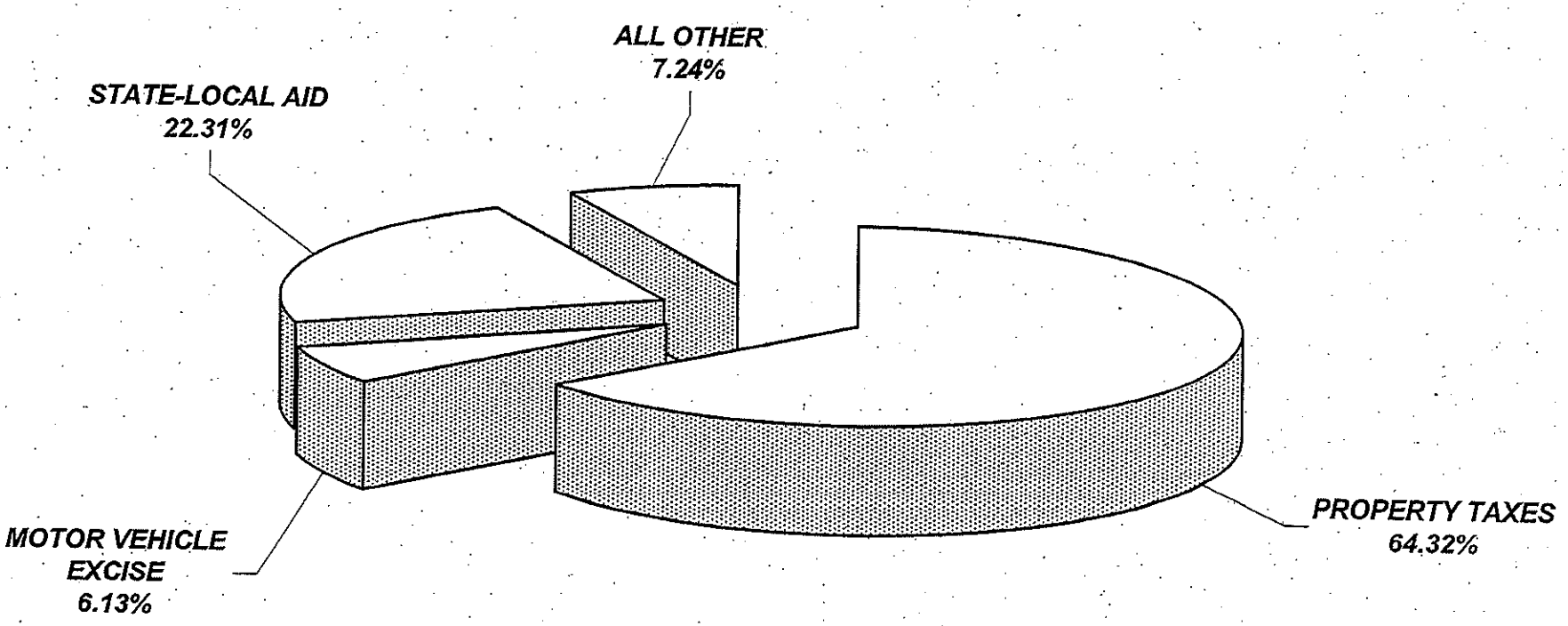

TOWN OF LUNENBURG
GENERAL FUND APPROPRIATIONS
SUMMARY & CLASSIFICATION OF ACCOUNTS
FISCAL YEAR 2003

PROGRAM NAME	APPROPRIATED FORWARD		TOTAL FUNDS AVAILABLE	TOTAL EXPENDED	TOTAL ENCUMBERED	BALANCE TO REVENUE
GENERAL GOVERNMENT						
Selectmen's Administration						
Payroll-Administration	$70,549.00			$71,382.32		
Selectmen's Salaries	$5,000.00			$4,283.63		
Other Expenses	$15,684.00			$10,227.79		
	$91,233.00		$91,233.00	$85,893.74		$5,339.26
Chief Admin Finance Officer						
Payroll	$75,043.00			$50,726.13		
Other Expenses	$4,383.58			$4,431.48		
	$79,426.58		$79,426.58	$55,157.61		$24,268.97
Technology Director	$6,501.62	fwd				
Payroll	$80,783.00			$82,115.25		
Other Expenses	$46,683.00			$51,210.47		
	$135,967.62		$135,967.62	$133,325.72		$2,641.90
Computer Advisory Committee						
Payroll						
Other Expenses	$90.00					
	$90.00		$90.00	$0.00		$90.00
Computer Training 13/95	$1,277.14	fwd	$1,277.14	$1,213.38	$63.76	
Zoning Board of Appeals	$2,703.12	rft				
Payroll-Clerical	$1,687.01			$1,937.16		
Other Expenses	$1,710.99			$4,089.62		
	$6,101.12		$6,101.12	$6,026.78		$74.34
Assessor's Administration	$718.00	mrt				
Payroll	$49,081.00			$49,369.21		
Assessors' Salaries	$3,000.00			$3,000.00		
Regional Assessor	$31,711.00			$31,710.38		
Other Expenses	$20,350.00			$13,386.62		
	$104,860.00		$104,860.00	$97,466.21		$7,393.79
Town Accountant	$452.00	mrt				
Payroll-Town Accountant	$43,733.00			$44,184.68		
Payroll-Clerical	$43,361.00			$43,360.94		
Other Expenses	$2,400.00			$2,225.43		
	$89,946.00		$89,946.00	$89,771.05		$174.95
	$12,000.00	rft				
Annual Audit	$14,500.00		$26,500.00	$26,500.00		
Tax Collector's Salary	$14,597.00			$14,595.29		
	$14,597.00		$14,597.00	$14,595.29		$1.71
Tax Collector's Administration	$847.28	fwd				
Payroll-Clerical	$52,608.80			$53,799.77		
Other Expenses	$12,814.00			$12,470.31		
	$66,270.08		$66,270.08	$66,270.08		
Tax Title & Takings						
Payroll	$1,200.00			$1,673.94		
Other	$1,260.00			$1,699.15		
	$2,460.00		$2,460.00	$3,373.09		($913.09)
Tax Title Foreclosure	$2,450.00	fwd				
Payroll	$2,000.00			$568.32		
Other	$5,540.00			$3,828.15		
	$9,990.00		$9,990.00	$4,396.47	$4,680.44	$913.09

TOWN OF LUNENBURG
GENERAL FUND APPROPRIATIONS
SUMMARY & CLASSIFICATION OF ACCOUNTS (cont)
FISCAL YEAR 2003

PROGRAM NAME	APPROPRIATED FORWARD		TOTAL FUNDS AVAILABLE	TOTAL EXPENDED	TOTAL ENCUMBERED	BALANCE TO REVENUE
	$145.00	mrt				
Treasurer's Salary	$22,810.00			$22,954.27		
	$22,955.00		$22,955.00	$22,954.27		$0.73
Treasurer's Administration	$964.00	mrt				
Payroll	$28,947.08			$30,739.89		
Other Expenses	$30,534.00			$29,705.19		
	$60,445.08		$60,445.08	$60,445.08		
	$500.00	fwd				
Banking Charges	$6,800.00		$7,300.00	$7,288.78		$11.22
Town Clerk's Salary	$12,360.00		$12,360.00	$12,360.00		
Town Clerk's Administration	$186.00	fwd				
Payroll	$23,325.90			$23,199.53		
Other Expenses	$3,650.00			$3,962.37		
	$27,161.90		$27,161.90	$27,161.90		
	$103.87	fwd				
Elections	$2,800.00	rft				
Payroll	$4,850.31			$6,588.63		
Other Expenses	$3,433.37			$4,598.92		
	$11,187.55		$11,187.55	$11,187.55		
Registration & Census	$550.00	fwd				
Payroll	$2,313.54			$3,646.06		
Other Expenses	$3,406.00			$2,623.48		
	$6,269.54		$6,269.54	$6,269.54		
	$13,218.44	rft				
Legal Expenses	$71,500.00			$80,297.62		
	$84,718.44		$84,718.44	$80,297.62	$4,420.82	
Planning Board						
Payroll-Clerical	$28,093.00			$28,092.45		
Other Expenses	$9,278.00			$8,619.50		
	$37,371.00		$37,371.00	$36,711.95		$659.05
Finance Committee	$1,026.42		$1,026.42	$1,026.42		
Conservation Commission						
Payroll	$23,880.00			$21,454.65		
Other Expenses	$18,642.00			$16,905.79		
	$42,522.00		$42,522.00	$38,360.44		$4,161.56
Inspector Weights & Measures						
Payroll	$226.80					
Other Expenses	$250.00			$403.57		
	$476.80		$476.80	$403.57		$73.23
Central Purchasing						
Electricity	$59,445.00		$59,445.00	$67,927.53		
Heating	$21,820.00		$21,820.00	$17,651.26		
Water	$2,350.00		$2,350.00	$3,478.32		
Sewer	$650.00		$650.00	$150.00		
Rubbish	$1,000.00		$1,000.00	$638.12		
Equipment Mtc	$25,755.00		$25,755.00	$12,882.03		
Telephone	$19,985.00		$19,985.00	$25,235.28		
	$131,005.00		$131,005.00	$127,962.54		$3,042.46

TOWN OF LUNENBURG
GENERAL FUND APPROPRIATIONS
SUMMARY & CLASSIFICATION OF ACCOUNTS (cont)
FISCAL YEAR 2003

PROGRAM NAME	APPROPRIATED FORWARD		TOTAL FUNDS AVAILABLE	TOTAL EXPENDED	TOTAL ENCUMBERED	BALANCE TO REVENUE
PUBLIC SAFETY						
	$1,000.00	fwd				
Police Department	$911.00	mrt				
Payroll-Administration	$106,889.00			$115,238.53		
Payroll-Enforcement	$661,237.00			$639,934.29		
Uniform Allowance	$13,100.00			$13,100.00		
Educational Incentive	$88,794.00			$88,611.27		
Other Expenses	$12,502.48			$12,066.09		
	$884,433.48		$884,433.48	$868,950.18	$1,000.00	$14,483.30
Police Lock-Up						
Payroll	$21,000.00			$20,823.59		
Other Expenses	$2,783.00			$2,346.29		
	$23,783.00		$23,783.00	$23,169.88		$613.12
Injury Leave	$13,479.00		$13,479.00	$35,974.14		($22,495.14)
	$3,847.83	rft				
Police Fire Medical Exp.	$2,172.52		$6,020.35	$6,020.35		
	$2,992.00	mrt				
Fire Department	$6,910.00	rft				
Payroll-Administration	$77,412.51			$76,612.27		
Payroll-Firefighters/Daymen	$161,924.32			$158,877.79		
Payroll-E.M.S.	$47,380.00			$37,894.70		
Payroll-Clerical	$192.49			$191.76		
Clothing Allowance	$2,400.00			$3,200.00		
Other Expenses	$46,595.00			$43,682.41		
	$345,806.32		$345,806.32	$320,458.93	$1,832.76	$23,514.63
Fire Hydrant Expense	$13,800.00		$13,800.00	$13,526.73		$273.27
Comp. Radio Watch Personnel	$1,869.39	fwd				
Payroll	$141,216.68			$141,216.68		
Other Expenses	$800.00			$800.00		
	$143,886.07		$143,886.07	$142,016.68	$1,825.49	$43.90
Animal Control Officer						
Payroll	$11,580.00			$11,580.00		
Care & Custody	$7,600.00			$7,500.00		
Other Expenses	$4,637.00			$4,737.00		
	$23,817.00		$23,817.00	$23,817.00		
Building Inspector						
Payroll-Building Inspector	$54,437.00			$54,436.67		
Payroll-Clerical	$22,927.00			$22,988.98		
Payroll-Zoning Enforcement	$7,602.00			$3,650.00		
Other Expenses	$2,467.00			$4,932.45		
	$87,433.00		$87,433.00	$86,008.10	$367.06	$1,057.84
Civil Defense						
Payroll	$225.00			$225.00		
Other Expenses	$730.00			$688.90		
	$955.00		$955.00	$913.90		$41.10
Wiring Inspector	$4,584.41	rft				
Payroll	$15,756.00			$20,340.41		
Other Expenses	$250.00			$250.00		
	$20,590.41		$20,590.41	$20,590.41		
Plumbing & Gas Inspector	$2,436.20	rft				
Payroll	$14,213.20			$16,649.40		
Other Expenses	$300.00			$300.00		
	$16,949.40		$16,949.40	$16,949.40		

TOWN OF LUNENBURG
GENERAL FUND APPROPRIATIONS
SUMMARY & CLASSIFICATION OF ACCOUNTS (cont)
FISCAL YEAR 2003

PROGRAM NAME	APPROPRIATED FORWARD		TOTAL FUNDS AVAILABLE	TOTAL EXPENDED	TOTAL ENCUMBERED	BALANCE TO REVENUE
HEALTH AND SANITATION						
Inspector of Animals	$600.00		$600.00	$600.00		
General Health Expense						
Payroll-Clerical	$19,953.71			$19,497.92		
Other Expenses	$1,707.29			$619.88		
	$21,661.00		$21,661.00	$20,117.80		$1,543.20
Nursing Service Nashoba	$7,396.00		$7,396.00	$7,396.00		
Nashoba Membership	$25,148.00		$25,148.00	$25,148.00		
Participation Mental Health	$5,000.00		$5,000.00	$2,500.00	$2,500.00	
DEPARTMENT OF PUBLIC WORKS						
Highway Labor						
Payroll-Highway Laborers	$297,480.86			$297,080.86		
Payroll-Clerical	$24,433.10			$24,433.10		
	$321,913.96		$321,913.96	$321,513.96		$400.00
Vehicle Maintenance	$12,949.95	fwd				
Payroll						
Other Expenses	$77,344.00			$77,933.64		
	$90,293.95		$90,293.95	$77,933.64	$12,278.22	$82.09
Town Barn Maintenance	$9,898.06	fwd				
Other Expenses	$5,300.00			$15,159.57		
	$15,198.06		$15,198.06	$15,159.57	$38.00	$0.49
General Highway Mtc.	$17,303.96	fwd				
Payroll						
Other Expenses	$63,638.42			$43,595.04		
	$80,942.38		$80,942.38	$43,595.04	$37,256.99	$90.35
Highway Overtime	$2,266.02		$2,266.02	$2,266.02		
Snow Removal						
Payroll	$35,000.00			$66,756.31		
Other Expenses	$100,000.00			$147,891.60		
	$135,000.00		$135,000.00	$214,647.91		($79,647.91)
	$7,800.00	fwd	$7,800.00			
Traffic Signs & Devices	$5,000.00		$5,000.00			
	$12,800.00		$12,800.00	$11,027.49	$1,300.00	$472.51
Tree Removal						
Payroll	$600.00			$1,060.14		
Other Expenses	$6,400.00			$100.00		
	$7,000.00		$7,000.00	$1,160.14	$5,839.00	$0.86
47/86 Town Forest Consultant	$500.00	fwd	$500.00		$500.00	
Director of Facilities & Grounds	$4,500.00	fwd				
Payroll	$82,448.00			$79,514.58		
Other Expenses	$21,448.00			$18,725.15		
	$108,396.00		$108,396.00	$98,239.73		$10,156.27
	$1,086.00	mrt				
	$38,074.60					
Cemetery-Payroll	$39,160.60		$39,160.60	$39,159.44		$1.16
Park Department	$1,178.00	mrt				
Payroll	$57,177.00			$56,220.94		
Other Expenses	$3,900.00			$3,900.00		
	$62,255.00		$62,255.00	$60,120.94		$2,134.06
Solid Waste Removal	$365,000.00		$365,000.00	$355,629.66		$9,370.34

TOWN OF LUNENBURG
GENERAL FUND APPROPRIATIONS
SUMMARY & CLASSIFICATION OF ACCOUNTS (cont)
FISCAL YEAR 2003

PROGRAM NAME	APPROPRIATED FORWARD		TOTAL FUNDS AVAILABLE	TOTAL EXPENDED	TOTAL ENCUMBERED	BALANCE TO REVENUE
PUBLIC ASSISTANCE						
Council on Aging						
Payroll	$58,925.00			$47,598.45		
Other Expenses	$4,906.00			$12,113.92		
	$63,831.00		$63,831.00	$59,712.37		$4,118.63
Admin. Veteran's Services						
Contracted Services-Agent	$3,624.00			$3,624.00		
Other Expenses	$1,209.00			$752.00		
	$4,833.00		$4,833.00	$4,376.00		$457.00
Veteran's Benefits	$1,500.00	rft				
	$500.00		$2,000.00	$2,000.00		
Registration of Veteran's Graves	$100.00		$100.00	$78.00		$22.00
Memorial Day	$360.00		$360.00	$318.15		$41.85
SCHOOLS						
School Department						
Payroll	$8,313,560.00			$8,251,122.81		
Other Expenses	$1,635,363.00			$1,628,462.62		
	$9,948,923.00		$9,948,923.00	$9,879,585.43	$68,391.51	$946.06
School Encumbered Funds FY 02	$49,977.87	fwd	$49,977.87	$40,589.86		$9,388.01
Monty Tech Assessment	$383,454.00		$383,454.00	$383,454.00		
School Bldg Comm Expenses 11/98	$1,500.00	fwd	$1,500.00		$1,500.00	
School Transportation-Regular	$357,156.00			$357,156.00		
School Transportation-Special Ed	$198,336.00			$186,581.66		
Late Bus Runs	$4,000.00			$2,850.00		
	$559,492.00		$559,492.00	$546,587.66	$12,904.34	
LIBRARY						
Ritter Memorial Library	$2,054.00	mrt				
Payroll	$147,465.00			$149,050.52		
Other Expenses	$43,385.00			$43,278.46		
	$192,904.00		$192,904.00	$192,328.98		$575.02
CULTURE & RECREATION						
Band Concerts	$1,010.00	fwd				
	$2,955.00		$3,965.00	$3,340.00	$625.00	
Art 6/02 ATM Cultural Council	$5,170.00		$5,170.00	$5,170.00		
UNCLASSIFIED						
Historical Commission	$680.49	fwd				
	$1,010.00		$1,690.49	$1,569.47		$121.02
Reserve Fund (after appropriations)	$0.00		$0.00			
Art 7/02 ATM Merit (after appropriations)	$0.00		$0.00			
Public Buildings						
Jones House	$300.00			$282.25		
	$300.00		$300.00	$282.25		$17.75
M.R.P.C. Assessment	$2,231.00		$2,231.00	$2,230.62		$0.38

TOWN OF LUNENBURG
GENERAL FUND APPROPRIATIONS
SUMMARY & CLASSIFICATION OF ACCOUNTS (cont)
FISCAL YEAR 2003

PROGRAM NAME	APPROPRIATED FORWARD	TOTAL FUNDS AVAILABLE	TOTAL EXPENDED	TOTAL ENCUMBERED	BALANCE TO REVENUE
Town Reports					
Payroll	$1,000.00		$1,463.44		
Other Expenses	$6,500.00		$5,609.59		
	$7,500.00	$7,500.00	$7,073.03		$426.97
Worker's Compensation	$100,599.15	$100,599.15	$98,299.00		$2,300.15
Health Insurance CH 32B	$2,249,000.00		$2,226,178.55		
Life Insurance	$15,100.00		$13,839.77		
Medicare	$128,000.00		$127,812.59		
Insurance Cost Control	$8,142.00		$8,142.00		
Total Insurance	$2,400,242.00	$2,400,242.00	$2,375,972.91		$24,269.09
Physicals	$2,200.00	$2,200.00	$1,725.00		$475.00
Liability Insurance	$131,944.00	$131,944.00	$128,850.00		$3,094.00
Unemployment Comp	$15,818.85	$15,818.85	$15,818.85		
Pension Allow. J. MacGregor	$616.00	$616.00	$615.45		$0.55
DEBT AND INTEREST					
Principal Serial Loans	$484,905.00	$484,905.00	$480,256.31		$4,648.69
Interest Serial Loans	$157,028.00	$157,028.00	$128,893.88		$28,134.12
Interest Temporary Loans	$50,000.00	$50,000.00	$44,927.16		$5,072.84
STATE & COUNTY ASSESSMENTS					
County Tax	$13,538.00	$13,538.00	$13,538.00		
Motor Vehicle Excise Surcharge			$1,560.00		($1,560.00)
Mosquito Control	$24,854.00	$24,854.00	$26,018.00		($1,164.00)
Air Pollution District	$2,238.00	$2,238.00	$2,238.00		
Special Education	$321.00	$321.00	($307.00)		$628.00
M.B.T.A.	$3,269.00	$3,269.00	$3,269.00		
Voting Machines Loan			$8,708.00		($8,708.00)
Regional Transit Authority	$20,247.00	$20,247.00	$20,113.00		$134.00
	$64,467.00	$64,467.00	$75,137.00		($10,670.00)
County Retirement Assessment	$364,229.00	$364,229.00	$364,229.00		
TRANSFERS TO OTHER FUNDS					
Transfer to Special Revenue Fund	$4,830.00	$4,830.00	$4,830.00		
Transfer to Capital Project Fund	$231,895.34	$231,895.34	$231,895.34		
GRAND TOTAL	$19,192,006.97	$19,192,006.97	$18,951,175.84	$157,323.39	$83,507.74

fwd - forward from FY 2002
rft - Reserve Fund Transfer
mrt - Art 7/02 ATM merit

GENERAL FUND EXPENDITURES FY 03

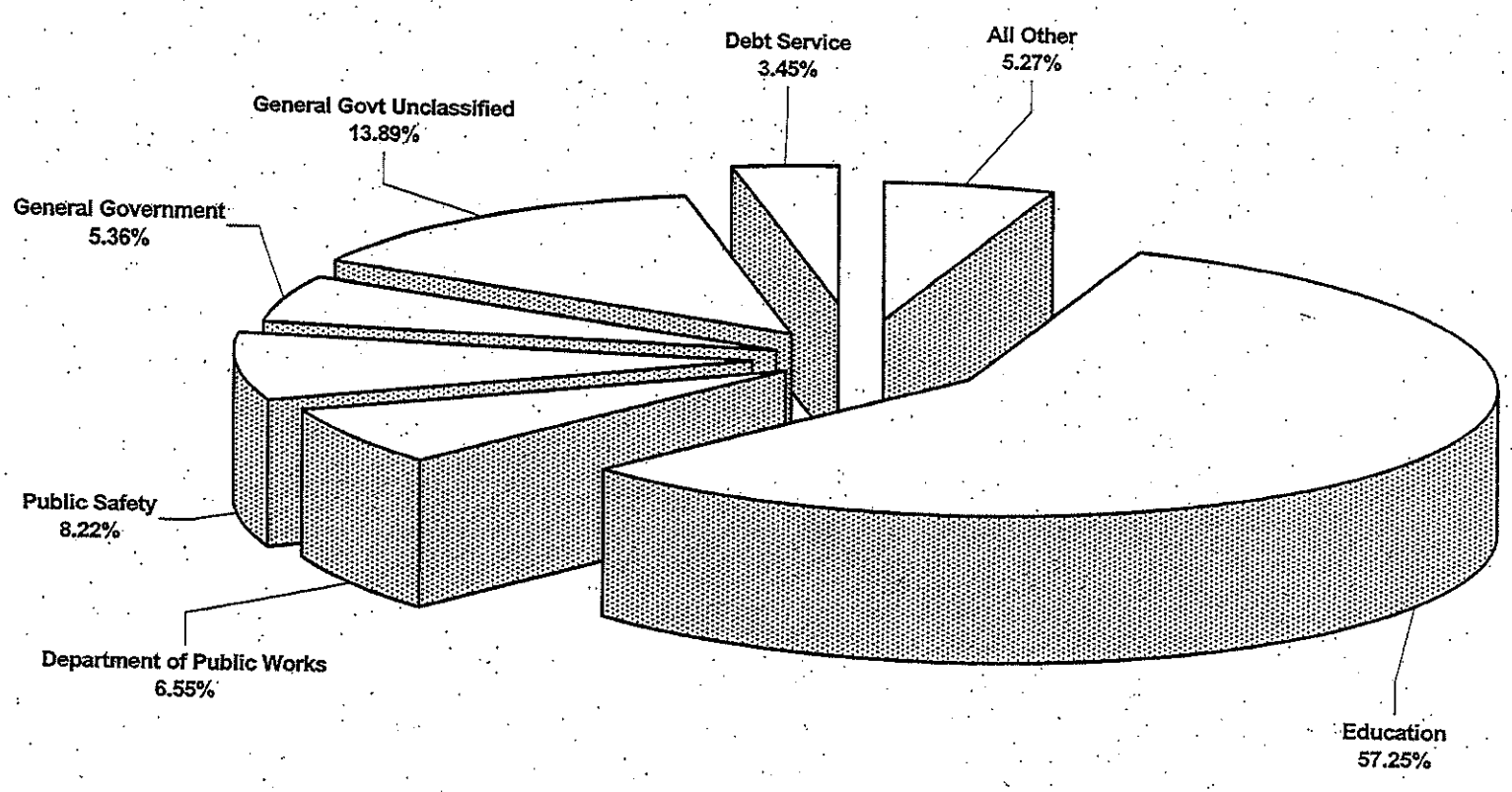

TOWN OF LUNENBURG SPECIAL REVENUE FUNDS JUNE 30, 2003				
PROGRAM NAME	FORWARD 7/1/02	TOTAL RECEIPTS	TOTAL DISBURSEMENTS	BALANCE FWD TO FY'04
Regional Assessor Fund	$16,367.44	$60,681.00	$46,141.12	$30,907.32
Conservation Fund	$319.59			$319.59
Conservation Consultant Revolving	$7,831.00			$7,831.00
Conservation Gift Fund-Cook Farm	$148.00			$148.00
Town Records Gift Fund	$252.35			$252.35
Scholarship Fund	$1.19	$541.55	$420.00	$122.74
Sewer Gift Fund	$387.09			$387.09
Insurance Recoveries	$859.86			$859.86
Household Hazardous Waste	$768.76			$768.76
SCHOOL DEPARTMENT				
School Lunch	$32,968.56	$465,940.16	$496,090.22	$2,818.50
Chapter I	$42,907.40	$154,585.00	$156,631.05	$40,861.35
PL 94-142	$2,020.52	$230,271.00	$218,834.52	$13,457.00
PL 99-457	$1.58			$1.58
Chapter 188	$1.37			$1.37
Chapter 493 Emergency Ed. Grant	$3.04			$3.04
N.C.T.M. Standards	$4.46			$4.46
Gov. Alliance Against Drugs	($717.13)	$8,564.00	$3,357.91	$4,488.96
Eisenhower Grant	$3,459.48		$12.79	$3,446.69
Per Pupil Aid	$279.01			$279.01
Family Math/Science FY 93	$5.15			$5.15
FY98 After School Program	$0.00		($454.59)	$454.59
FY99 After School Program	$0.00		($491.58)	$491.58
FY99 Advanced Placenent	$0.00		($667.73)	$667.73
FY99 Teen Dating Violence	$0.00		($257.16)	$257.16
Palms Collaborative FY 94	$0.54			$0.54
FY98 Health Protection	$0.00		($28.47)	$28.47

TOWN OF LUNENBURG SPECIAL REVENUE FUNDS JUNE 30, 2003 (cont)				
PROGRAM NAME	FORWARD 7/1/02	TOTAL RECEIPTS	TOTAL DISBURSEMENTS	BALANCE FWD TO FY'04
Dept. of Public Health FY 98	$6.69			$6.69
FY98 School Based Comm Serv	$0.00		($2,875.78)	$2,875.78
Dept. of Public Health FY 97	$5.59			$5.59
Health Protection FY 99	$150.00		($2,625.31)	$2,775.31
School Linked Services FY 97	$6.99			$6.99
School Linked Services FY 98	$0.32			$0.32
United Way Venture	$40.42			$40.42
Cross Curriculum FY 96	($0.33)			($0.33)
Recovery for Lost Books	$976.72			$976.72
Chapter 658 School Athletics	$2,337.57	$42,633.35	$32,911.22	$12,059.70
After School Activities	$28,148.43	$231,089.49	$241,926.83	$17,311.09
School Facilities Use	$116.77	$898.00		$1,014.77
Non-Resident Tuition	($41,584.51)	$398,291.28	$425,532.24	($68,825.47)
Driver Education	$17,490.48	$25,650.00	$20,048.08	$23,092.40
Adult Education	$1,727.99	$724.00	$1,264.91	$1,187.08
Summer School Program	$1,266.50	$9,940.00	$10,000.00	$1,206.50
School Choice	$133.71	$368,379.00	$300,250.06	$68,262.65
School Gift Fund	$9,504.40	$12,903.06	$8,756.40	$13,651.06
Greenthumb Revolving	$6,238.88	$1,249.00	$2,167.91	$5,319.97
Custodian Special Details	$1,472.54	$2,784.82	$5,041.42	($784.06)
Sped Curriculum Frameworks	$5,327.93	$19,567.00	$21,216.74	$3,678.19
Academic Support Services	$292.35			$292.35
Health Protection	$7,540.43			$7,540.43
School Linked Services	$341.60		$121.52	$220.08
Sped Early Childhood	$2,780.39	$12,655.00	$13,860.14	$1,575.25
Class Size Reduction	$1,736.02		$840.00	$896.02

TOWN OF LUNENBURG SPECIAL REVENUE FUNDS JUNE 30, 2003 (cont)				
PROGRAM NAME	FORWARD 7/1/02	TOTAL RECEIPTS	TOTAL DISBURSEMENTS	BALANCE FWD TO FY'04
Title VI Grant	$285.71	$8,597.00	$4,280.86	$4,601.85
Tech Prep Consortium	$0.00	$1,000.00	$1,000.00	$0.00
Gifted & Talented	$82.14			$82.14
BC/BS Healthy Choices	$306.10	$3,000.00	$2,525.58	$780.52
Early Childhood Family Network	$4,078.99	$54,206.00	$51,542.78	$6,742.21
Goals 2000 Professional Development	$144.94		$78.05	$66.89
Corrective Action Assistance Grant	($3,900.00)	$5,000.00	$1,100.00	$0.00
Summer Success Grant	($688.50)	$8,800.00	$6,531.04	$1,580.46
FY03 Teacher Quality	$0.00	$30,810.00	$37,519.67	($6,709.67)
FY02 Academic Support	$0.00	$15,680.00	$15,512.00	$168.00
Enhanced Ed Through Tech	$0.00	$5,524.00	$4,779.97	$744.03
THMS HVAC/Boilers Grant	$0.00		$14,917.00	($14,917.00)
50/50 Grant Sped Tuitions	$0.00	$9,215.39	$15,359.44	($6,144.05)
Rec School	$134.59	$36,898.82	$35,003.94	$2,029.47
PUBLIC SAFETY				
Insurance Recoveries - Police	$1,663.24	$19,936.56	$21,599.80	$0.00
Community Policing FY 96	$6.55			$6.55
Community Policing FY 97	$1.97			$1.97
Community Policing FY 98	$0.66			$0.66
Drug Forfeiture	$1,809.05		$500.00	$1,309.05
D.A.R.E. Grant FY 97	$34.85			$34.85
D.A.R.E. I Grant FY 97	$0.25			$0.25
Community Policing	$9,810.25	$10,000.00	$9,041.60	$10,768.65
Cops Universal Hiring	($6,262.40)	$34,196.00	$26,643.76	$1,289.84
EOPS Vest Reimbursement	$0.00	$412.50		$412.50
MCOPA Drink/Drive/Lose Grant	$0.00	$476.40	$476.40	$0.00
Fire SAFE Grant	$2,088.52	$1,133.64	$132.20	$3,089.96

TOWN OF LUNENBURG SPECIAL REVENUE FUNDS JUNE 30, 2003 (cont)				
PROGRAM NAME	FORWARD 7/1/02	TOTAL RECEIPTS	TOTAL DISBURSEMENTS	BALANCE FWD TO FY'04
FEMA Assistance to Firefighters Grant	($21,150.00)	$21,150.00		$0.00
Firefighter PS Equipment Grant	$0.00	$21,000.00	$20,970.00	$30.00
Firefighter Safety Equipment Grant	$9.84			$9.84
Police/Fire Special Details	($538.77)	$167,513.06	$158,835.14	$8,139.15
Coastal/Patriot Ambulance Revolving	$579.06	$52,887.03	$52,887.03	$579.06
GHSB Click It Or Ticket	$0.00		$2,827.08	($2,827.08)
Local Enforcement Equip	$0.00	$20,500.00	$15,249.68	$5,250.32
PARKS & RECREATION				
Park User Fees	$7,496.48	$7,933.00	$5,539.98	$9,889.50
Park Gift Fund	$283.24			$283.24
HIGHWAY DEPT.				
Chapter 90	$501.37	$4,535.29	$192,453.21	($187,416.55)
PWED Electric Ave Rehab	($137,197.09)	$188,404.59	$88,454.75	($37,247.25)
Ins. Recoveries Highway	$452.28			$452.28
Chapter 204/Acts of 1996	$0.11			$0.11
FEMA Snow Removal Reimb	$0.00	$24,765.68	$24,765.68	$0.00
COUNCIL ON AGING				
C.O.A./M.A.R.T. Revolving	($207.27)	$25,715.84	$25,011.97	$496.60
C.O.A. Formula Grant	$0.00	$7,419.00	$7,419.00	$0.00
E.O.C.D. Senior Center Grant	$1,543.00	$8.74		$1,551.74
Venture Grant - Are You OK	$24.00			$24.00
LIBRARY				
State Aid-Libraries	$14,435.83	$10,692.53	$10,400.00	$14,728.36
Library Gift Fund	$6,532.83	$615.00		$7,147.83
Library Revolving Fund	$162.85	$7,832.70	$6,086.02	$1,909.53

TOWN OF LUNENBURG SPECIAL REVENUE FUNDS JUNE 30, 2003 (cont)				
PROGRAM NAME	FORWARD 7/1/02	TOTAL RECEIPTS	TOTAL DISBURSEMENTS	BALANCE FWD TO FY'04
CEMETERIES				
Sale of Cemetery Lots	$126,637.81	$13,454.19	$1,200.00	$138,892.00
UNCLASSIFIED				
Elderly/Disabled Fund	$1,732.73	$764.20	$250.00	$2,246.93
275th Anniversary Fund	$34,557.12	$42,798.13	$36,015.46	$41,339.79
Historical Comm. Gift Fund	$137.36			$137.36
Mass Historical Comm Grant-Town Hall	($46,388.00)	$58,853.00	$8,315.00	$4,150.00
Police Gift Fund	$0.00	$2,400.00	$2,384.64	$15.36
Teen Center Gift Fund	$0.00	$303.09		$303.09
Public Safety Gift Fund	$0.00	$625.00		$625.00
MWPAT Septic Repair	$4,079.03			$4,079.03
WPAT Septic Receipts Reserved	$140,955.07	$4,587.97		$145,543.04
E.O.C.D. Septic I Grant	$55,220.65	$4,017.75		$59,238.40
Water Enterprise Fund	$1,339.60	$363.03	$1,442.49	$260.14
Sewer Enterprise Fund	$167,111.45	$198,187.77	$106,684.53	$258,614.69
Sewer Betterment Fund	$0.00	$303,842.37	$100,433.00	$203,399.37
CDBG Sewer Hookup Grant	($22,000.00)	$20,000.00	$13,080.00	($15,080.00)
DEP Pay As You Throw Grant	$0.00	$24,913.73	$20,193.30	$4,720.43
Repayments Sewer Hookup	$0.00	$700.00		$700.00
Solid Waste/Recycling Enterprise Fund	$44,197.36	$185,077.60	$104,776.91	$124,498.05
CVS Volunteer Challenge Grant	$500.00			$500.00
Fields Pond Foundation	$1,600.00			$1,600.00
March for Parks	$1,617.25			$1,617.25
L.E.A.P. Fund	$13,517.69	$9,792.03	$4,637.07	$18,672.65
Hollis Road Revolving	$3,036.06		$1,176.53	$1,859.53
GRAND TOTAL	**$564,302.99**	**$3,723,885.34**	**$3,258,057.02**	**$1,030,121.31**

CAPITAL PROJECT FUND FY 03

ART #/YR	PURPOSE	APPROPRIATED FORWARD		EXPENDED/ TRANSFERRED	BALANCE
21/84 ATM	SANDY COVE BETTERMENT	$60.00	fwd	$60.00	$0.00
22/84 ATM	PINE ACRES ROAD BETTERMENT	$10.00	fwd	$10.00	$0.00
51/85 ATM	CRESCENT ROAD BETTERMENT	$20.00	fwd	$20.00	$0.00
52/85 ATM	WOODLAND DRIVE BETTERMENT	$20.00	fwd	$20.00	$0.00
53/85 ATM	HORIZON ISLAND BETTERMENT	$20.00	fwd	$20.00	$0.00
02/91 STM	SUNSET LANE BETTERMENT	$81,153.16	fwd	$0.00	$81,153.16
07/93 ATM	LANDFILL CLOSURE	$82,171.50	fwd	$14,950.00	$67,221.50
14/93 ATM	AMERICANS W/ DISABILITIES ACT COMPLIANCE	$1,882.56	fwd	$1,882.56	$0.00
34/93 ATM	TAX REVALUATION - ASSESSOR'S ADMIN	$922.73	fwd	$0.00	$922.73
10/96 ATM	REPAIR (2) PARK BUILDING ROOFS	$163.17	fwd	$163.17	$0.00
35/97 ATM	LANCASTER AVENUE DRAINAGE	$2,360.00	fwd	$2,360.00	$0.00
35/97 ATM	JONES HOUSE FURNACE	$1,000.00	fwd	$1,000.00	$0.00
07/97 STM	HOOD/FIRE SUPPRESSION-EAGLE HOUSE	$685.47	fwd	$685.47	$0.00
30/98 ATM	FIRE ALARM UPGRADES-SCHOOLS	$445.70	fwd	$445.70	$0.00
29/98 ATM	BODY MOUNTED SANDER-HIGHWAY DEPT.	$1,290.00	fwd	$1,290.00	$0.00
28/98 ATM	VOTING MACHINES-TOWN CLERK	$996.70	fwd	$996.70	$0.00
31/98 ATM	ROUTE 13 DRAINAGE	$3,274.40	fwd	$3,274.40	$0.00
29/98 ATM	PURCHASE AMBULANCE-FIRE DEPARTMENT	$523.26	fwd	$523.26	$0.00
28/98 ATM	GENERATOR-CIVIL DEFENSE	$1,437.95	fwd	$1,437.95	$0.00
28/98 ATM	ONE TON DUMP TRUCK-HIGHWAY DEPARTMENT	$1,228.00	fwd	$1,228.00	$0.00
28/98 ATM	SERVER/SOFTWARE LICENSES/INET-ALL DEPTS.	$516.40	fwd	$0.00	$516.40
27/98 ATM	CAPITAL EXP/IMPROV/MTC FY 00	$431.37		$431.37	$0.00
37/99 ATM	CAPITAL EXPENDITURES UNDER $10,000				
37/99 ATM	SIGNAGE, BENCHES, TABLES-CONSERVATION COMMISSION	$2,000.00	fwd	$0.00	$2,000.00
37/99 ATM	4 FOOT AERATOR-PARK DEPARTMENT	$10.00	fwd	$0.00	$10.00
	TOPDRESSER-PARK DEPARTMENT	$95.00	fwd	$0.00	$95.00
	TRANSFER TO 4/02 CAPITAL ARTICLE	$0.00	fwd	$105.00	($105.00)
38/99 ATM	CAPITAL EXPENDITURES OVER $10,000				
38/99 ATM	DIESEL POWERED LAWN MOWER-FACILITIES DIRECTOR	$213.10	fwd	$0.00	$213.10
38/99 ATM	REPAIRS TO WALLIS PARK-PARK DEPARTMENT	$110.72	fwd	$0.00	$110.72
38/99 ATM	4 WHEEL DRIVE PICK UP-FIRE DEPARTMENT	$10.00	fwd	$0.00	$10.00
	SOFTWARE REPLACEMENT-FINANCIAL DEPARTMENTS	$18,905.00	fwd	$18,594.73	$310.27
	TRANSFER TO 4/02 CAPITAL ARTICLE	$0.00	fwd	$333.82	($333.82)
39/99 ATM	CAPITAL IMPROVEMENTS OVER $10,000				
30/00 ATM	EXTERIOR IMPROVEMENTS-TOWN HALL	$4,300.00	fwd	$4,300.00	$0.00
05/00 ATM	ENGINEERING SERVICES-TOWN SEWER	$668,533.66	fwd	$64,826.92	$603,706.74
07/99 STM	EAGLE HOUSE REPAIRS-COUNCIL ON AGING	$3,390.07	fwd	$0.00	$3,390.07
03/99 ATM	CONSTRUCT SEWERS-TOWN CENTER	$5,999,376.50	fwd	$1,607,595.00	$4,391,781.50
04/99 ATM	CONSTRUCT SEWERS-WHALOM AREA	$94,015.86	fwd	$94,015.86	$0.00
37/99 ATM	CAPITAL EXPENDITURES OVER $10,000				
	REPLACE RADIO RECEIVERS-FIRE DEPARTMENT	$20.25	fwd	$0.00	$20.25
	4 WHEEL DRIVE TRACTOR W/LOADER-MULTI DEPARTMENT	$28.06	fwd	$0.00	$28.06

CAPITAL PROJECT FUND FY 03 (cont)

ART #/YR	PURPOSE	APPROPRIATED FORWARD		EXPENDED/ TRANSFERRED	BALANCE
	(3) CRUISERS-POLICE DEPARTMENT	$199.75	fwd	$0.00	$199.75
	COMPUTER PLAN-ALL DEPARTMENTS	$2,488.46	fwd	$1,460.51	$1,027.95
	TRANSFER TO 4/02 CAPITAL ARTICLE	$0.00	fwd	$1,199.26	($1,199.26)
07/02 STM	CAPITAL IMPROVEMENTS OVER $10,000				
	ENGINEERING/CONSTRUCTION SEWERS	$850,000.00	fwd		$850,000.00
31/00 ATM	CAPITAL EXPENDITURES OVER $10,000				
33/00 ATM	LAND PURCHASE-CONSERVATION COMMISSION	$0.00	fwd	$13,168.00	($13,168.00)
38/01 ATM	CAPITAL EXPENDITURES				
	FILE CABINETS ASSESSORS ADMIN	$2,000.00	fwd	$0.00	$2,000.00
	PATROL CRUISER-POLICE DEPT	$4.31	fwd		$4.31
	WOOD CHIPPER -HIGHWAY DEPT	$1,100.00	fwd		$1,100.00
	PICKUP W /PLOW-HIGHWAY DEPT	$250.00	fwd		$250.00
39/01 ATM	CAPITAL IMPROVEMENTS				
	TOWN BEACH FACILITY-DIRECTOR OF FACILITIES/PARK	$8,005.00	fwd	$5,253.00	$2,752.00
	BOILER REPLACEMENT E.S./H.S. DIRECTOR OF FACILITIES	$13.00	fwd		$13.00
	GUARD RAILS-LANCASTER AVE-HIGHWAY DEPT	$43.05	fwd		$43.05
	TECHNOLOGY/ALL DEPARTMENTS-TECHNOLOGY DIR	$12,918.95	fwd		$12,918.95
09/01 ATM	LAND PURCHASE MASS AVENUE (SCHOOL PROPERTY)	$51,812.17	fwd	$24,441.84	$27,370.33
11/01 ATM	LAND PURCHASE MASS AVENUE (PUBLIC SAFETY BLDG)	$396,630.00	fwd	$396,630.00	$0.00
01/01 STM	DESIGN, CONSTRUCT, EQUIP PRIMARY SCHOOL	$10,133,022.81	fwd	$1,101,023.64	$9,031,999.17
03/01 STM	PLANNING-PUBLIC SAFETY FACILITY	$5,000.00	fwd	$5,000.00	$0.00
04/02 ATM	FY03 CAPITAL EXPENDITURES				
	PHOTOCOPIER-TOWNHALL	$4,100.00	fwd	$1,859.58	$2,240.42
	FLYOVER & DEED ANALYSIS-ASSESSORS	$45,736.00	fwd		$45,736.00
	COMPUTER REPLACEMENT TECHNOLOGY	$18,262.00	fwd	$18,253.00	$9.00
	PURCHASE CRUISERS-POLICE DEPT	$31,287.00	fwd	$31,287.00	$0.00
	FIREARMS-POLICE DEPT	$12,780.00	fwd		$0.00
	RESCUE/AMBULANCE-FIRE DEPT	$25,000.00	fwd	$25,000.00	$25,000.00
	PARKING LOT REPAIRS H.S/E.S.	$30,385.00	fwd		$30,385.00
	ADA EXPENDITURES H.S./E.S./M.S.	$14,950.00	fwd		$14,950.00
4 10/02 STM	GRANT MATCH FIRE TRUCK	$20,000.00	fwd		$20,000.00
5 10/02 STM	THMS HEATING SYSTEM	$275,000.00	fwd	$14,588.00	$260,412.00
6 10/02 STM	HEATING SYSTEM ES/HS	$105,000.00	fwd	$77,095.47	$27,904.53
8 10/02 STM	DESIGN/CONSTRUCT PUBLIC SAFETY	$5,800,000.00	fwd	$73,562.34	$5,726,437.66
GRAND TOTAL		$24,817,608.09		$3,610,391.55	$21,219,436.54

fwd - forward from FY 02
ATM - Annual Town Meeting
STM - Special Town Meeting

RECONCILIATION of TREASURER'S CASH

BALANCE JUNE 30, 2002	$3,851,439.00		
RECEIPTS 7/1/02 - 6/30/03	$69,885,335.00		
LESS INVESTMENTS TRANSFERRED	($25,194,490.00)		
		$44,690,845.00	
			$48,542,284.00
DISBURSED 7/1/02 - 6/30/03	$72,761,749.00		
LESS REVENUE CASH INVESTED	($42,189,770.00)		
		$30,571,979.00	
GENERAL LEDGER BALANCE	$17,970,305.00		

REVENUE CASH AND REVENUE CASH INVESTED:

FITCHBURG SAVINGS	$377,918.00	
MASS. MUNICIPAL DEP. TRUST	$1,058,901.00	
MMDT HIGHWAY BOND	$2,174.00	
FLEET MONEY MARKET	$9,662,230.00	
UNIBANK	$1,085,370.00	
CENTURY MONEY MARKET	$23,822.00	
FLEET BANK SENIOR GRANT	$1,552.00	
FLEET BANK SEPTIC GRANT	$59,238.00	
FLEET BANK SEWER ENTERPRISE	$251,487.00	
FLEET BANK WATER ENTERPRISE	$340.00	
FLEET BANK RUBBISH REMOVAL	$87,842.00	
FLEET BANK 275TH ANNIVERSARY	$39,247.00	
FLEET BANK TEEN CENTER	$303.00	
FLEET BANK/BOSTON SAFE PAYROLL/PAYABLES	($1,078,070.00) *	
CENTURY SECURITY STREET	$5,512.00	
COMMERCE	$157,086.00	
BANKNORTH	$1,324,254.00	
CITIZENS BANK	$17,508.00	
BOSTON SAFE	$359,420.00	
FIRSTFED CD	$4,000,000.00	
FIRSTFED	$530,027.00	
CASH ON HAND	$4,144.00	
		$17,970,305.00

*INVESTED MONIES NOT TRANSFERRED UNTIL CHECKS ARE ACTUALLY DISBURSED

BONDED INDEBTEDNESS

PURPOSE:	DATE OF ISSUE	AMOUNT	PAYABLE	RATE	PAID PREVIOUS YEARS PRINCIPAL	PAID PREVIOUS YEARS INTEREST	DUE IN FISCAL 2004 PRINCIPAL	DUE IN FISCAL 2004 INTEREST	TOTAL PAYMENTS THRU 2004 PRINCIPAL	TOTAL PAYMENTS THRU 2004 INTEREST	BALANCE
MUNICIPAL PURPOSE	08/15/95	$1,915,000	1996-2010	5.18%	$1,090,000	$527,367	$135,000	$39,100	$1,225,000	$566,467	$690,000
MASS WATER POOL 3	04/29/97	$165,000	1997-2017	1.80%	$40,892	$45,522	$7,323	$6,771	$48,215	$52,293	$116,785
MUNICIPAL PURPOSE	03/13/98	$660,000	1998-2005	5.15%	$475,000	$120,932	$95,000	$9,528	$570,000	$130,460	$90,000
MASS WATER POOL 4	04/29/98	$195,676	2001-2018	0.00%	$21,744	$18,874	$10,872	$7,623	$32,616	$26,497	$163,060
MASS WATER POOL 5	10/06/99	$397,049	2000-2020	1.83%	$48,056	$64,538	$16,552	$18,007	$64,608	$82,545	$332,441
MUNICIPAL PURPOSE	05/15/01	$1,085,000	2002-2011	4.79%	$300,000	$75,559	$100,000	$32,170	$400,000	$107,729	$685,000
MASS WATER POOL 7	06/27/01	$2,204,395	2002 - 2021		$110,410	$158,172	$93,531	$101,430	$203,941	$259,602	$2,000,454
MUNICIPAL PURPOSE	06/01/03	$17,585,000	2003 - 2023	3.62%	$0	$0	$745,000	$631,525	$745,000	$631,525	$16,840,000
TOTAL		$24,207,120			$2,086,102	$1,010,964	$1,203,278	$846,154	$3,289,380	$1,857,118	$20,917,740

BONDS AUTHORIZED AND UNISSUED AS OF JUNE 30, 2003

WELL SITES	$520,000
ROAD BETTERMENT PETITION	$40,000
CAPITAL EXPENDITURES-EQUIPMENT	$333
TOWN HALL BOILER	$0.67
CAPITAL EXPENDITURES-EQUIPMENT	$440
ENGINEERING & CONSTRUCTING SEWER WORKS	$250,000
SEWER CONSTRUCTION	$6,195,605
SEWER CONSTRUCTION	$2,000,000
SEPTIC UPGRADES	$200,000
MIDDLE SCHOOL BOILERS	$275,000
ELEMENTARY SCHOOL HEATING SYSTEM	$105,000
ENGINEERING & CONSTRUCTING SEWER WORKS	$850,000
SCHOOL BLDS. HEATING- ASBESTOS REMOVAL- ELECTRICAL	$1,540,550
TOTAL UNISSUED:	$11,976,929

BONDED INDEBTEDNESS - REPAYMENT SCHEDULE

TOWN OF LUNENBURG DEBT REPAYMENT SCHEDULE AS OF JUNE 30 2003

FISCAL YEAR	2004	2005	2006	2007	2008	2009	2010	2011	2012	2013
MUNICIPAL PURPOSE										
PRINCIPAL (82% EXEMPT)	$135,000	$120,000	$120,000	$120,000	$120,000	$110,000	$100,000			
INTEREST	$39,100	$32,920	$26,980	$20,890	$14,620	$8,470	$2,750			
TOTAL MUNICIPAL PURPOSE	$174,100	$152,920	$146,980	$140,890	$134,620	$118,470	$102,750			
MASS WATER POOL 3*										
PRINCIPAL	$7,323	$7,502	$7,686	$7,951	$8,225	$8,446	$8,679	$8,926	$9,180	$9,450
INTEREST	$6,771	$6,404	$6,031	$5,568	$5,089	$4,662	$4,211	$3,735	$3,257	$2,751
TOTAL MASS WATER POLL TRUST	$14,094	$13,906	$13,717	$13,519	$13,314	$13,108	$12,890	$12,661	$12,437	$12,201
MUNICIPAL PURPOSE										
PRINCIPAL (69% EXEMPT)	$95,000	$90,000								
INTEREST	$9,528	$4,635								
TOTAL MUNICIPAL PURPOSE	$104,528	$94,635								
MASS WATER POOL 4*										
PRINCIPAL	$10,872	$10,872	$10,872	$10,872	$10,872	$10,872	$10,872	$10,872	$10,872	$10,872
INTEREST	$7,623	$7,188	$6,753	$6,264	$5,720	$5,218	$4,708	$4,151	$3,594	$12,936
TOTAL MASS WATER POLL TRUST	$18,495	$18,060	$17,625	$17,136	$16,592	$16,090	$15,580	$15,023	$14,466	$23,808
MASS WATER POOL 5*										
PRINCIPAL	$16,552	$16,859	$17,195	$17,616	$18,115	$18,585	$19,071	$20,000	$20,000	$20,000
INTEREST	$18,007	$17,287	$16,531	$15,682	$14,744	$13,822	$12,876	$11,875	$10,838	$9,750
TOTAL MASS WATER POLL TRUST	$34,559	$34,146	$33,726	$33,298	$32,859	$32,407	$31,947	$31,875	$30,838	$29,750
MUNICIPAL PURPOSE										
PRINCIPAL	$100,000	$100,000	$100,000	$100,000	$100,000	$100,000	$100,000	$85,000		
INTEREST	$32,170	$28,070	$23,970	$19,820	$15,670	$11,670	$7,670	$3,570		
TOTAL MUNICIPAL PURPOSE	$132,170	$128,070	$123,970	$119,820	$115,670	$111,670	$107,670	$88,570		
MASS WATER POOL 7*										
PRINCIPAL	$93,531	$94,700	$96,223	$98,015	$99,840	$102,348	$105,571	$108,757	$115,000	$115,000
INTEREST	$101,430	$98,344	$95,029	$91,180	$87,260	$83,266	$77,893	$72,350	$66,913	$60,875
TOTAL MASS WATER POLL TRUST	$194,961	$193,044	$191,252	$189,195	$187,100	$185,614	$183,464	$181,107	$181,913	$175,875
MUNICIPAL PURPOSE										
PRINCIPAL	$745,000	$755,000	$760,000	$770,000	$765,000	$780,000	$795,000	$815,000	$830,000	$850,000
INTEREST	$631,525	$616,625	$601,525	$586,325	$570,925	$551,800	$512,800	$488,950	$464,500	$431,300
TOTAL MUNICIPAL PURPOSE	$1,376,525	$1,371,625	$1,361,525	$1,356,325	$1,335,925	$1,331,800	$1,307,800	$1,303,950	$1,294,500	$1,281,300
GRAND TOTAL PRINCIPAL	$1,203,278	$1,194,933	$1,111,976	$1,124,454	$1,122,052	$1,130,251	$1,139,193	$1,048,555	$985,052	$1,005,322
GRAND TOTAL INTEREST	$846,155	$811,472	$776,819	$745,729	$714,027	$678,908	$622,907	$584,631	$549,101	$517,612
TOTAL DEBT	$2,049,433	$2,006,405	$1,888,795	$1,870,183	$1,836,079	$1,809,159	$1,762,100	$1,633,186	$1,534,153	$1,522,934

*MASS WATER POLLUTION TRUST: PAYMENT AMOUNTS TO BE SUBSIDIZED BY EQUITY EARNINGS AND CONTRACT ASSISTANCE PAYMENTS

BONDED INDEBTEDNESS - REPAYMENT SCHEDULE

TOWN OF LUNENBURG DEBT REPAYMENT SCHEDULE AS OF JUNE 30 2003

FISCAL YEAR	2014	2015	2016	2017	2018	2019	2020	2021	2022	2023	TOTAL
MUNICIPAL PURPOSE											
PRINCIPAL (82% EXEMPT)											$825,000
INTEREST											$145,730
TOTAL MUNICIPAL PURPOSE											$970,730
MASS WATER POOL 3*											
PRINCIPAL	$9,729	$10,026	$10,334	$10,651							$124,108
INTEREST	$2,227	$1,683	$1,116	$533							$54,037
TOTAL MASS WATER POLL TRUST	$11,956	$11,709	$11,450	$11,184							$178,145
MUNICIPAL PURPOSE											
PRINCIPAL (69% EXEMPT)											$185,000
INTEREST											$14,163
TOTAL MUNICIPAL PURPOSE											$199,163
MASS WATER POOL 4*											
PRINCIPAL	$10,872	$10,868	$10,868	$10,868	$10,868	$10,868					$173,932
INTEREST	$3,036	$2,479	$1,922	$1,365	$815	$272					$74,044
TOTAL MASS WATER POLL TRUST	$13,908	$13,347	$12,790	$12,233	$11,683	$11,140					$247,976
MASS WATER POOL 5*											
PRINCIPAL	$20,000	$20,000	$25,000	$25,000	$25,000	$25,000	$25,000				$348,993
INTEREST	$8,650	$7,550	$6,344	$4,969	$3,531	$2,094	$688				$175,236
TOTAL MASS WATER POLL TRUST	$28,650	$27,550	$31,344	$29,969	$28,531	$27,094	$25,688				$524,229
MUNICIPAL PURPOSE											
PRINCIPAL											$785,000
INTEREST											$142,610
TOTAL MUNICIPAL PURPOSE											$927,610
MASS WATER POOL 7*											
PRINCIPAL	$120,000	$125,000	$125,000	$130,000	$135,000	$140,000	$145,000	$145,000			$2,093,985
INTEREST	$54,838	$48,538	$41,975	$35,413	$28,588	$21,500	$14,500	$7,250			$1,087,140
TOTAL MASS WATER POLL TRUST	$174,838	$173,538	$166,975	$165,413	$163,588	$161,500	$159,500	$152,250			$3,181,125
MUNICIPAL PURPOSE											
PRINCIPAL	$870,000	$890,000	$915,000	$935,000	$960,000	$985,000	$1,010,000	$1,035,000	$1,060,000	$1,060,000	$17,585,000
INTEREST	$388,800	$354,000	$318,400	$281,800	$244,400	$206,000	$166,600	$126,200	$84,800	$42,400	$7,669,675
TOTAL MUNICIPAL PURPOSE	$1,258,800	$1,244,000	$1,233,400	$1,216,800	$1,204,400	$1,191,000	$1,176,600	$1,161,200	$1,144,800	$1,102,400	$25,254,675
GRAND TOTAL PRINCIPAL	$1,030,601	$1,055,894	$1,086,202	$1,111,519	$1,130,868	$1,160,868	$1,180,000	$1,180,000	$1,060,000	$1,060,000	$22,121,018
GRAND TOTAL INTEREST	$457,551	$414,250	$369,757	$324,080	$277,334	$229,865	$181,788	$133,450	$84,800	$42,400	$9,362,635
TOTAL DEBT	$1,488,152	$1,470,144	$1,455,959	$1,435,599	$1,408,202	$1,390,733	$1,361,788	$1,313,450	$1,144,800	$1,102,400	$31,483,653

*MASS WATER POLLUTION TRUST: PAYMENT AMOUNTS TO BE SUBSIDIZED BY EQUITY EARNINGS AND CONTRACT ASSISTANCE PAYMENTS

COLLECTION OF TAXES

TAX	FORWARD	COMMITMENTS	ADJUSTMENTS	REFUNDS	PAYMENTS	ABATEMENTS	TAX TITLE	BALANCES
1990 M.V.E.	$129.36							$129.36
1997 M.V.E.	$2,126.16				($263.75)			$1,862.41
1998 M.V.E.	$2,825.73				($453.86)			$2,371.87
1999 M.V.E.	$3,246.46				($145.93)			$3,100.53
2000 M.V.E.	$6,995.34	$5.00			($705.74)	($30.94)		$6,263.66
2001 M.V.E.	$7,874.81	$26,356.25		$1,349.44	($25,344.01)	($1,477.82)		$8,758.67
2002 M.V.E.	$73,009.62	$195,947.49		$13,359.35	($249,214.17)	($13,492.93)		$19,609.36
2003 M.V.E.		$972,964.66		$4,507.74	($910,534.36)	($21,486.28)		$45,451.76
1994 P.P.	$1,298.93							$1,298.93
1995 P.P.	$2,667.06							$2,667.06
1997 P.P.	$4,118.98							$4,118.98
1998 P.P.	$4,348.08				($497.59)			$3,850.49
1999 P.P.	$3,359.03				($647.92)			$2,711.11
2000 P.P.	$2,309.34			$84.73	($235.16)			$2,158.91
2001 P.P.	$2,000.19				($307.04)			$1,693.15
2002 P.P.	$7,831.47				($3,072.44)			$4,759.03
2003 P.P.		$194,828.06			($191,117.18)	($101.02)		$3,609.86
2003 R.E.		$11,940,035.67		$32,119.23	($11,790,578.18)	($67,088.04)	($114,845.54)	($356.86)
TAX LIENS	$616,446.26	$141,108.89			($270,289.90)			$487,265.25
ROLLBACK TAXES	$22,005.90							$22,005.90
STR. BETT. COMM.		$13,839.62			($13,811.32)		($28.30)	$0.00
STR. INT. COMM.		$11,239.88			($11,229.69)		($10.19)	$0.00
STREET BETT.	$122,430.18				($13,839.62)			$108,590.56
WATER BETT. COMM.		$30,524.80			($29,524.35)	($151.73)	($848.72)	$0.00
WATER INT. COMM.		$14,163.37			($13,283.27)	($145.66)	($734.44)	$0.00
WATER BETT.	$178,886.52				($30,373.07)			$148,513.45
SEPTIC BETT. COMM.		$3,369.56			($3,369.56)			$0.00
SEPTIC INT. COMM.		$1,218.41			($1,218.41)			$0.00
SEWER BETT COMM.		$180,720.00		$1,250.00	($165,220.00)	($5,000.00)	($11,750.00)	$0.00
SEWER INT COMM.		$2,955.56		$26.03	($2,632.76)	($104.11)	($244.72)	$0.00
SEWER BETT.		$1,537,500.00		$1,250.00	($313,470.00)	($31,500.00)		$1,193,780.00
GRAND TOTAL	$1,063,780.06	$15,266,777.22	$0.00	$53,946.52	($14,041,379.28)	($140,578.53)	($128,461.91)	$2,074,084.08

TOWN OF LUNENBURG TRUST FUNDS

ACCOUNT	ALLOCATION	BEG BAL 6/30/02	DIVIDENDS	CONTRIBUTIONS	REDEMPTIONS	BOOK BALANCE
PERPETUAL CARE BEQUEST	$ 0.53	$ 120,036.70	$ 4,909.22			$ 120,036.70
C ALLEN HEADSTONE	$ 0.00	$ 100.00	$ 3.72			$ 100.00
AMERICAN LEGION POOR	$ 0.00	$ 500.00	$ 18.60			$ 500.00
J & M HOWARD SWK/GRD	$ 0.02	$ 5,000.00	$ 185.96			$ 5,000.00
SALE OF CEMETERY LOT	$ 0.12	$ 28,650.30	$ 1,111.08		$ 550.00	$ 29,211.38
GEORGE WAKEFIELD SCHOL	$ 0.06	$ 16,588.07	$ 586.69			$ 16,588.07
PERP CARE BEQ INT	$ 0.04	$ 9,632.24	$ 330.07		$ 5,339.39	$ 9,532.14
C A HEADSTONE INT	$ 0.00	$ 414.20	$ -			$ 417.92
AMERICAN LEGION POOR INT	$ 0.04	$ 9,088.56	$ 325.42			$ 9,432.58
J & M SDWLK/GRDS INT	$ 0.09	$ 21,898.31	$ 845.17			$ 22,929.43
WORTHY POOR INCOME	$ 0.10	$ 23,987.95	$ 928.85			$ 24,916.80
GEORGE WAKEFIELD SCH INT	$ 0.00	$ 1,839.75	$ 36.26		$ 1,500.00	$ 962.70
TOTAL COLONIAL	1	$ 237,736.08	$ 9,297.76	$ -	$ 7,389.39	$ 239,627.71
FIRSTFED						
CONS LAND PURCH		$ 21,650.00	$ 424.58			$ 21,650.00
R BURTON CONS		$ 501.48	$ 9.83			$ 501.48
H BENJAMIN CONS		$ 232.72	$ 4.58			$ 232.72
G HUBBARD CONS		$ 161.70	$ 3.17			$ 161.70
I KIMBALL CONS		$ 90.85	$ 1.77			$ 90.85
CHESTER MOSSMAN TEEN CENTER		$ -	$ 45.76	$ 30,000.00		$ 30,000.00
CONS LAND PURCHASE INT		$ 34,024.79	$ 636.59			$ 35,085.96
R BURTON CONS INT		$ 849.35	$ 15.92			$ 875.10
H BENJAMIN CONS INT		$ 626.65	$ 11.81			$ 643.04
G HUBBARD CONS INT		$ 560.51	$ 10.59			$ 574.27
I KIMBALL CONS INT		$ 279.26	$ 5.26			$ 286.29
CHESTER MOSSMAN TEEN INT			$ -			$ 45.76
TOTAL TEEN CENTER						$ 30,045.76
TOTAL CONSERVATION		$ 58,977.31	$ 1,169.86	$ 30,000.00	$ -	$ 60,101.41
TOTAL FIRSTFED						$ 90,147.17
PBHG FUNDS MORTEN SMITH-PETERSON		$ 3,691.36				$ 3,560.32
TOTAL PBHG FUNDS		$ 3,691.36	$ -	$ -	$ -	$ 3,560.32
PBHG FUNDS LIBRARY ALL-PURPOSE		$ 3,869.31				$ 3,649.07
TOTAL PBHG FUNDS		$ 3,869.31	$ -	$ -	$ -	$ 3,649.07
ARTS LOTTERY		$ 5,905.74	$ 111.40	$ 7,170.00	$ (4,120.00)	$ 9,067.14
PLAYGROUND		$ 21.77	$ 0.30			$ 22.07
TOTAL MMDT:		$ 5,927.51	$ 111.70	$ 7,170.00	$ (4,120.00)	$ 9,089.21

MABEL ALLEN STOCK #20376		$ 498.00				$ 498.00
JOSEPH HARWOOD STOCK #C6		$ 480.48				$ 480.48
TOTAL STOCK:		$ 978.48				$ 978.48
STABILIZATION FIRSTFED BANK		$ 659,725.89	$ 12,247.59		$ 671,285.08	$ 688.40
STABILIZATION FIRSTFED CD	MATURITY 11/28/03	$ -		$ 671,285.08		$ 671,285.08
TOTAL STABILIZATION:		$ 659,725.89	$ 12,247.59	$ 671,285.08	$ 671,285.08	$ 671,973.48
C DICKINSON LIB BOOKS		$ 3,000.00	$ 64.65			$ 3,000.00
C WATSON LIB BOOKS		$ 2,000.00	$ 43.11			$ 2,000.00
F CALDWELL LIB BOOKS		$ 500.00	$ 10.78			$ 500.00
S DICKINSON LIB BOOKS		$ 500.00	$ 10.78			$ 500.00
E DIMOND LIB BOOKS		$ 300.00	$ 6.47			$ 300.00
A TAYLOR LIB BOOKS		$ 300.00	$ 6.47			$ 300.00
S STICKNEY LIB BOOKS		$ 2,000.00	$ 43.10			$ 2,000.00
L TAYLOR LIBRARY BOOKS		$ 300.00	$ 6.47			$ 300.00
E BAILEY LIB		$ 500.00	$ 10.78			$ 500.00
L GOODRICH LIB		$ 1,000.00	$ 21.56			$ 1,000.00
S HOWARD LIB		$ 500.00	$ 10.78			$ 500.00
A & M ESTABROOKS LIB		$ 200.00	$ 4.31			$ 200.00
I & H KIMBALL LIB		$ 4,000.00	$ 86.21			$ 4,000.00
C DICKINSON BOOKS INT		$ 1,708.81	$ 37.64			$ 1,811.10
C WATSON BOOKS INT		$ 1,140.20	$ 25.12			$ 1,208.43
F CALDWELL BOOKS INT		$ 286.11	$ 6.30			$ 303.19
S DICKINSON BOOKS INT		$ 284.22	$ 6.26			$ 301.26
E DIMOND BOOKS INT		$ 171.35	$ 3.78			$ 181.60
A TAYLOR BOOKS INT		$ 171.25	$ 3.78			$ 181.50
S STICKNEY BOOKS INT		$ 1,146.48	$ 25.26			$ 1,214.84
L TAYLOR BOOKS INT		$ 243.16	$ 5.33			$ 254.96
E BAILEY LIB INT		$ 588.17	$ 12.86			$ 611.81
L GOODRICH LIB INT		$ 1,172.56	$ 25.64			$ 1,219.76
S HOWARD LIB INT		$ 588.86	$ 12.88			$ 612.52
A & M ESTABROOK LIB INT		$ 234.24	$ 5.13			$ 243.68
I & H KIMBALL LIB INT		$ 2,769.99	$ 60.86			$ 2,917.06
PERPETUAL CARE BEQUEST		$ 27,097.04	$ 641.46			$ 27,097.04
SALE OF CEMETERY LOTS		$ 98,137.49	$ 2,343.11			$ 100,480.60
PERPETUAL CARE BEQUEST INT		$ 2,137.37	$ 56.54			$ 2,835.37
M L ALLEN SCH PRIZE		$ 114.33	$ 2.08	$ 69.00	$ 70.00	$ 115.41
J A HOWARD SCH PRIZE		$ 76.06	$ 1.26	$ 69.00	$ 70.00	$ 76.32
ATHLETIC BOOSTER CLUB		$ 25,374.77	$ 600.68			$ 25,374.77
ATHLETIC BOOSTER CLUB INT		$ 1,509.68	$ 21.34		$ 1,300.00	$ 831.70

TOWN OF LUNENBURG TRUST FUNDS

RYAN BUSQUE SCHOLARSHIP	$ 9,145.00	$ 197.10				$ 9,145.00
RYAN BUSQUE SCHOL INT	$ 393.51	$ 4.19		$ 400.00		$ 194.80
TIMOTHY STANLEY SCHOLARSHIP	$ 8,105.00	$ 169.52		$ 350.00		$ 7,755.00
TIMOTHY STANLEY SCHOL INT	$ 667.07	$ 6.21		$ 650.00		$ 192.80
PHILIP CROUSE SCHOLARSHIP	$ 2,360.00	$ 40.29	$ 500.00	$ 960.00		$ 1,900.00
PHILIP CROUSE SCHOL INT	$ 41.58	$ 0.76		$ 40.00		$ 42.63
DORA HAVEN SCHOLARSHIP	$ 371,954.67	$ 7,499.94				$ 371,954.67
DORA HAVEN SCHOL INT	$ 4,914.81	$ 167.43				$ 12,582.18
BETH CURTIS SCHOLARSHIP	$ -	$ 74.78	$ 4,595.00			$ 4,595.00
BETH CURTIS SCHOL INT	$ -	$ 0.55				$ 75.33
TOTAL CENTURY:	$ 577,633.78	$ 12,383.55	$ 5,233.00	$ 3,840.00		$ 591,410.33
GRAND TOTAL TRUST FUNDS:						$ 1,610,435.77
TOTAL TRUST ACCTS JUNE 30, 2003						
SUMMARY OF FUNDS						
CEMETERY	$ 289,711.15					
WORTHY POOR FUNDS	$ 34,849.37					
SIDEWALKS & GROUNDS	$ 27,929.43					
LIBRARY	$ 26,161.71					
LIBRARY PBHG FUND	$ 3,649.07					
MORTEN-SMITH PBHG FUND	$ 3,560.32					
CONSERVATION	$ 60,101.41					
CHESTER MOSSMAN TEEN CENTER	$ 30,045.76					
STABILIZATION	$ 671,973.48					
ARTS LOTTERY	$ 9,067.14					
SCHOOL PRIZE FUND	$ 191.73					
WAKEFIELD SCHOLARSHIP	$ 17,550.77					
BUSQUE SCHOLARSHIP	$ 9,339.80					
TIMOTHY STANLEY SCHOLARSHIP	$ 7,947.80					
ATHLETIC BOOSTER CLUB	$ 26,206.47					
PLAYGROUND FUND	$ 22.07					
STOCKS	$ 978.48					
PHILIP CROUSE SCOLARSHIP	$ 1,942.63					
DORA HAVEN SCHOLARSHIP	$ 384,536.85					
BETH CURTIS SCHOLARSHIP	$ 4,670.33					
GRAND TOTAL TRUST FUNDS:	$ 1,610,435.77					

FOLLOWING ARE THOSE RECORDS OF BIRTHS, MARRIAGES, AND DEATHS THAT EITHER OCCURRED IN OUR TOWN OR RECORDS WHICH WERE FORWARDED TO THIS TOWN FROM OTHER MUNICIPALITIES IN THE STATE. LUNENBURG RESIDENTS ARE URGED TO NOTIFY THE TOWN CLERK IF IN-STATE RECORDS HAVE NOT BEEN RECEIVED AND RECORDED. IF A BIRTH, MARRIAGE, OR DEATH OCCURRED OUTSIDE THE STATE, THE SAME MAY BE RECORDED IN THE LUNENBURG TOWN CLERK'S OFFICE IF CERTIFIED RECORDS ARE PRESENTED. IN SOME CASES THE TOWN CLERK'S RECORDS ARE SUPPLEMENTED BY RECORDS OF BURIALS WHICH APPEAR ELSEWHERE IN THIS REPORT. IN ORDER FOR THESE RECORDS TO ALSO BE INCLUDED IN THE OFFICIAL VITAL STATISTICS RECORDS, THE FAMILY OF THE DECEASED SHOULD PRESENT A CERTIFIED COPY OF THE DEATH CERTIFICATE TO THE TOWN CLERK. IN ACCORDANCE WITH THE GENERAL LAWS, MARRIAGES WHICH OCCUR HERE BUT RELATE TO LICENSES WHICH WERE OBTAINED ELSEWHERE IN THE STATE ARE NO LONGER INCLUDED IN OUR OFFICIAL TOWN RECORDS.

BIRTHS - 2003

DATE	NAME	BIRTHPLACE	PARENTS
JAN			
1	Jessica Jayne Tonole	Worcester	Richard D. & Kelly A. Tonole
7	Samuel James Seminatore	Leominster	Daniel P. Seminatore & Agona M. Hardison-Seminatore
9	Ryan Angelo Montuori	Worcester	Angelo R. & Cheryl A. Montuori
10	Haley Eve Lewenczuk	Leominster	Jason T. & Sarah J. Lewenczuk
21	Sean Egan Tuttle	Concord	James M. & Kristan A. Tuttle
FEB			
5	Aengus Leo Manuel	Concord	Henry J. III & Nancy E. Manuel
11	Taylor Jolynn Kerins	Leominster	Gregory H. Jr. & Tracey L. Kerins
17	Gwendolyn Margaret Fuellemann	Worcester	Andreas W. & Lisa D. Fuellemann
20	Annabelle June Townsend	Newton	William I. & Hazel D. Townsend
20	Beatrice Elsie Townsend	Newton	William I. & Hazel D. Townsend
21	Bridgette Elizabeth Leet	Concord	David H. Leet T & Michele A. Deshler
MAR			
10	Steven Richard Maki	Leominster	David R. & Kimberly A. Maki
10	Daniel Ryan Mathieu	Leominster	Daniel R. & Michele L. Mathieu
25	Kaitlyn Mae Merrill	Lowell	Robert B. Jr. & Kendra J. Merrill
APR			
4	Erik Michael Thacker	Concord	Michael R. & Jennifer C. Thacker
4	Luke Robert Thacker	Concord	Michael R. & Jennifer C. Thacker
5	Brianna Bro-Nhi Nguen	Leominster	Thai N. & Tracy Huynh
21	Andrew Connor Woods	Boston	Robert D. & Danielle M. Woods
27	Genevieve Rose Victoria Farr	Concord	David J. Farr & Jennifer L. Gionet-Farr
27	Olivia Rose Victoria Farr	Concord	David J. Farr & Jennifer L. Gionet-Farr
MAY			
2	Ilias Hammond Niemi	Worcester	David M. & Lyn N. Niemi
4	Allison Diane McCutcheon	Worcester	Michael J. & Jeanne O. McCutcheon
6	Hunter Marcel Sicard	Leominster	William A. & Amy L. Sicard
9	Jack Thomas Rodgers Mason	Leominster	Thomas E. & Torri A. Rodgers
14	Ryan Austin Miller	Concord	Marc A. & Heidi L. Miller
17	Kasen William Deming	Worcester	Thomas D. & Michelle L. Deming
17	Colby Daniel Deming	Worcester	Thomas D. & Michelle L. Deming
18	Vaughn Chase Randle	Leominster	Steven R. & Christine L. Randle
23	Jenna Riley Ahlman	Leominster	Daniel & Gretchen M. Ahlman
25	Lauren Marcey Ruggiero	Leominster	Patrick L. & Melanie L. Ruggiero
29	William Scott Trudeau	Leominster	Scott D. & Jennifer L. Trudeau
JUNE			
7	Evan James DiGeronimo	Leominster	Robert M. & Kelly B. DiGeronimo
10	Samuel Henry Paolini	Concord	Paul S. & Kimberley L. Paolini
13	Michael James Gardner	Leominster	Robert A. II & Geraldine Gardner
17	Peter Daniel Hennessey	Leominster	Richard D. & Cathy A. Hennessy
18	Casey Lynn Kashuba	Worcester	Kurt D. & Heidi L. Kashuba
18	Gabriel Douglas Kashuba	Worcester	Kurt D. & Heidi L. Kashuba
21	Olivia Rose Catalini	Concord	Michael J. & Christine Catalini

DATE	NAME	BIRTHPLACE	PARENTS
JULY			
1	Calliope Belle Analisa Mendoza	Leominster	Jeffrey L. & Kristi A. Mendoza
6	Brodie Thomas Vowles	Gardner	Edward F. & Janie L. Vowles
8	Clara Margaret Harsen	Worcester	Brett J. & Carrie M. Harsen
8	Adia Marie Harsen	Worcester	Brett J. & Carrie M. Harsen
9	MaryElizabeth Grace Thurston	Leominster	Steven S. & Mary K. Thurston
17	Connor Ryan Magoon	Leominster	Thomas D. & Mary A. Magoon
22	Troy Robert Drasser	Concord	Timothy W. & Jennifer A. Drasser
30	Ryan Patrick Linabury	Gardner	David M. & Karen E. Linabury
AUG			
1	Isabella Rose Miller	Leominster	Stanley J. & Lydia M. Miller
11	Duncan Matthew Poitras	Worcester	Jason P. & Monica L. Poitras
18	Angela Nicole Dumford	Newton	Scott A. & Corey A. Dumford
18	Michael Jacob Dumford	Newton	Scott A. & Corey A. Dumford
20	Benjamin Thomas Franco	Leominster	Louis J. & Darlene S. Franco
SEPT			
1	Sarah Elizabeth Costich	Concord	Matthew E. & Colleen M. Costich
5	Michael Dana Peterson	Worcester	Richard S. & Janis C. Peterson
5	Jamie Robert Royka	Worcester	Paul A. & Deborah J. Royka
10	Bella Faith Petricca	Boston	Lawrence N. Jr. & Kristen M. Petricca
11	Michael Andrew Harrington	Leominster	Frank P. & Vicki L. Harrington
18	Grace Marie Roy	Worcester	Gregory S. & Pauline J. Roy
20	Molly T. Belleza	Leominster	Gregory P. & Michelle L. Belleza
24	Leah Rose Robinson	Leominster	Jared R. & Beth A. Robinson
OCT			
10	Christina Mary Saucier	Leominster	Thomas D. & Mariene A. Saucier
10	Greyson Wayne Edward	Concord	Chris & Stacey L. Edward
11	Mackenzie Lyn Luth	Concord	Michael F. & Jennifer L. Luth
21	Jackson Henry Dance	Concord	Charles M. Jr. & Robin G. Dance
24	Elizabeth Brooke Musselman	Leominster	Robert B. & Erika H. Musselman
26	Lilianna Marie White	Leominster	Joseph B. & Donna M. White
NOV			
3	Olivia Evangelin Powers	Worcester	Stephen T. & Ami L. Powers
5	Finn David Daly	Concord	David R. & Holly B. Daly
9	Richard Michael Manklewicz	Leominster	Richard P. & Christine E. Manklewicz
13	Logan Arthur Doege	Worcester	Jeffrey W. & Mary Jo Doege
13	Tyler James Doege	Worcester	Jeffrey W. & Mary Jo Doege
14	Adam Zachary Martin	Concord	David P. & Elaine M. Martin
16	Rebecca Elizabeth LaFrance	Concord	Wayne E. & Heather E. LaFrance
25	Gwendolyn Colleen Hanrahan	Worcester	Christopher M. & Libby C. Hanrahan
DEC			
6	Amanda Eleanor Bertrand	Cambridge	Paul J. & Wendy L. Bertrand
8	Michael Edward Alleva	Leominster	Edward W. Jr. & Jane G. Alleva
10	Nicholas Adam Garland	Concord	Jeff R. & Kathleen Garland
11	Morgan Louise Funnell	Gardner	Douglas R. & Sonja E. Funnell
21	Lindsay Marie Moore	Leominster	Jerome A. Jr. & Amy R. Moore
25	Maxwell Benjamin Brown	Leominster	Donald R. & Jennifer M.R. Brown
27	Anthony Rocco Carnivale	Leominster	Jeffrey J. & Catherine A. Carnivale

MARRIAGES - 2003

DATE	NAME	DATE OF BIRTH	RESIDENCE
JAN	No Marriages		
FEB			
8	James J. Mulligan	01/05/51	Lunenburg
	Cuc Kim Nguyen	07/11/49	Lunenburg
11	Pall Mar Magusson	07/15/79	Vinalhaven, ME
	Juliane M. Ferguson	04/26/78	Lunenburg
14	Joseph M. Mangano	03/20/71	Lunenburg
	Carolyn A. Mara	05/12/64	Lunenburg
14	Mark S. Houle	04/24/57	Lunenburg
	Ginny A. Platt	07/28/66	Lunenburg
15	Christopher G. Munyon	09/18/67	Lunenburg
	Pamela F. Aho	05/23/58	Lunenburg
MAR			
1	Matthew T. Murphy	12/30/70	Lunenburg
	Kathryn A. Oviatt	08/23/74	Lunenburg
7	Michael T. Eaton	11/08/69	Lunenburg
	Tehani M. Whalen	01/23/73	Lunenburg
APR			
19	Jason F. Comeau	01/12/78	Lunenburg
	Lisa M. Robichaud	01/28/77	Lunenburg
26	Mark W. Doe	02/19/55	Lunenburg
	Michele R. Parella	12/28/69	Lunenburg
26	Tracy C. Talbert	01/11/62	Lunenburg
	Lisa A. Dyer	01/10/60	Lunenburg
MAY			
17	Joshua DeFelice	08/02/78	Lunenburg
	Christine L. James	02/19/75	Lunenburg
17	Douglas J. Bourque	01/03/56	Lunenburg
	Deborah R. Smith	07/13/52	Lunenburg
18	Steven R. Chartier	12/14/76	Lunenburg
	Heather L. Cuene	03/24/79	Lunenburg
31	Edward M. Jack	03/11/71	Lunenburg
	Angela M. Lohss	06/12/76	Lunenburg
JUNE			
07	Todd A. Holman	06/20/66	Lunenburg
	Tracey A. Clegg	01/19/66	Lunenburg
14	Peter B. Davis	08/26/79	Gardner
	Stacey J. Frost	12/19/75	Gardner
14	J. Edmund Daniels	11/18/50	Lunenburg
	Mary E. Schindler	08/31/49	Lunenburg
21	Phillip A. Arpano	04/04/73	Lunenburg
	Amy M. Dobeck	08/29/75	Lunenburg
21	Michael B. Forget	07/24/67	Lunenburg
	Rise E. Morroni	04/09/54	Lunenburg
22	David M. Scofield	09/21/74	Lunenburg
	Stephanie M. Kuzmitch	06/09/78	Lunenburg
28	Michael P. Ghilardi	07/30/62	Lunenburg
	Carol A. Gilson	08/06/70	Lunenburg
28	Peter M. Kelly	12/24/66	Lunenburg
	Lynne A. Baczewski	09/18/73	Lunenburg

MARRIAGES (continued)

DATE	NAME	DATE OF BIRTH	RESIDENCE
JULY			
5	John M. Nacke	07/26/48	Leominster
	Catherine M. LaVallee	11/15/54	Leominster
12	Jason O. Boyle	10/24/72	Lunenburg
	Rachel L. Pratt	12/11/72	Lunenburg
12	Patrick E. Kenney	07/19/76	Mason, NH
	Sara Youngblood	08/15/76	Mason, NH
19	Jason R. Norstrom	04/13/82	Leominster
	Bobby J. Belair	03/23/79	Leominster
19	Michael P. Howley	07/26/64	Lunenburg
	Virgen M. Cintron	02/11/60	Lunenburg
AUG			
1	Darren R. Specht	04/02/68	Lunenburg
	Patricia R. Aube	11/24/65	Lunenburg
9	Garth L. Gyles	10/26/64	Lunenburg
	Megan E. Flynn	07/10/70	Lunenburg
14	Ernest E. Gould III	12/05/56	Fitchburg
	Nicole M. Cappucci	08/03/77	Fitchburg
23	John M. Rodriquenz	11/26/49	Lunenburg
	Sharon M. Flanagan	07/21/72	Lunenburg
SEPT			
10	Patrick M. Johnson	2/23/64	Lunenburg
	Cheryl L. Hooper	9/14/68	Lunenburg
14	Michael R. Allain	4/22/65	Leominster
	Kim M. Stetson	10/08/70	Leominster
14	Peter G. Allen	12/31/66	Lunenburg
	Brenda L. Chapman	5/02/73	Lunenburg
20	Joshua M. Freedenberg	10/02/73	Brooklyn, NY
	Tracy E. Liberman	5/10/74	Brooklyn, NY
27	James H. Donalds	6/03/60	Lunenburg
	Linda E. Dunham	2/03/70	Lunenburg
27	Sean W. McKain	10/01/82	Lunenburg
	Felicia H. Luhtjarv	12/30/74	Lunenburg
OCT			
7	William E. Nutter	10/09/78	Lunenburg
	Jennifer L. Nappila	03/14/75	Lunenburg
11	Paul R. Bartel	05/23/69	Lunenburg
	Tammy A. Rager	07/15/77	Lunenburg
NOV			
15	Lars E. Hoffmann	06/05/73	Koeln, Germany
	Anastasia R. Ludden	11/07/78	Lunenburg
29	Jeffrey A. Monlz	10/05/60	Lunenburg
	Dawn E. Maguy	09/15/70	Lunenburg
DEC			
20	Andrew R. Harding	08/23/75	Fitchburg
	Alexandria Ramirez	07/23/70	Fitchburg
27	Kevin M. Henry	02/21/82	Rolla, Missouri
	Melody A. Anderson	03/13/81	Lunenburg

DEATHS - 2003

DATE	NAME	AGE
JAN		
3	Richard F. Mulligan	74
3	Raymond G.B. Morin Jr.	50
10	Ronald R. Lamothe	61
12	Stella LeClair	93
13	Karen E. Destadio	45
23	Patricia L. McCann	59
26	Cherie Tuohy-Shadd	50
FEB		
3	Kathleen Deming	96
5	Joan G. Szocik	69
11	Grace M. Kilbourn	96
14	Betty L. Rhodes	67
16	Lucy J. Valera	89
17	Aime J. Dufresne	61
17	Gladys M. Goodale	95
22	Marjorie E. Lucier	73
28	Constance D. Ward	78
30	Victor R. Gervais	49
MAR		
1	Oscar R. Kramer	82
5	Alphonse L. Thibault	85
6	Mary E. Abrahamovich	70
20	Ronald J. LaPerle	46
31	Albert C. Lyons Jr.	64
APR		
12	Fernando R. Courchesne	55
27	Jonathan Sims	25
30	Victor R. Gervais	49
MAY		
4	James D. Bilek	72
7	John J. Previte	79
9	John J. Soroka	91
19	George R. Simpson	95
31	Jeannette M. McNally	73
JUNE		
9	Brian M. Adams	40
10	Joan M. Deming	71
19	Gabriel D. Kashuba	Newborn
28	Leoline M. Boucher	59

DATE	NAME	AGE
JULY		
10	Anne M. Dahlgren	90
13	Theresa D. Maki	72
19	Eunice M. Patenaude	83
21	Marjorie Faulkner	89
26	Michele Doe	33
26	Charles F. French	75
26	John A. Woodward	61
29	Rosemarie LaFleur	62
AUG		
1	Norman W. DeMone	72
11	Jean C. Brogna	73
14	Raymond T. Toro	70
22	Mary Farrell	73
23	Samuel M. Toro	8
25	Almon O. Ruggles	79
27	Walter M. Maki	76
SEPT		
2	Stacey E. Bradley	37
2	Rodney F. Poland Jr.	85
7	George F. Waller	83
11	Ruth H. Lashua	69
11	Angelina L. Blake	66
19	Ronald E. Poulson	64
22	John U. Salo	79
23	Roselle A. Hoover	53
27	Elizabeth R. Lakso	83
OCT		
4	Mildred B. Farquhar	100
10	Nancy L. Dionne	71
16	Ralph L. Ciccolini	49
19	Robert E. Hale	71
26	Joseph A. Lavallee	73
NOV		
1	Daniel W. Gibbs	40
7	Theodore D. Turnley Sr.	77
23	Charles Shannon Jr.	82
27	Robert P. McNally	73
27	Ann E. Latini	80
DEC		
4	Rene J. Albert	77
12	George E. Progin	70
21	Joseph A. Rodrigues	43
31	Wilfred J. Arsenault	77

TOWN MEETING EXCERPTS

The Annual Town Meeting was called to order at 9:00 AM, May 3, 2003 in the Lunenburg High School Auditorium. The call to the meeting was read by the Town Clerk and the pledge of allegiance was recited, followed by a moment of silence. The Annual Town Meeting was adjourned to take action on the Special Town Meeting.

SPECIAL TOWN MEETING WARRANT

ARTICLE 1. To see if the Town will vote to authorize the Treasurer, with the approval of the Selectmen, to borrow up to $216,643.59 from time to time, in anticipation of revenue reimbursement from MGL Chapter 90; or take any other action relative thereto. *Board of Selectmen and Finance Committee recommend approval.* VOTED UNANIMOUSLY

ARTICLE 2. To see if the Town will vote to appropriate from available funds all sums of money necessary to amend the amounts voted for the Town's FY'03 Budget, under Article 3 of the May 4, 2002 Annual Town Meeting Warrant; or take any other action relative thereto. *Board of Selectmen and Finance Committee recommend approval.* VOTED to add to Line #4 $12, 818. Line #14 $10,000. Line #24 $19,035. Line #32 $45,000. Line #44 $10,979. Line #82 $28,136. And deduct from Line #6 $140,000. Line #11 $15. Line #19 $5,000. Line #21 $1,200. Line #22 $90. Line #26 $1,081. Line #28 $1,600. Line #30 $1,950. Line #34 $447. Line #35 $122. Line #36 $144. Line #37 $569. Line #38 $52. Line #39 $648. Line #40 $1,000. Line #42 $13,501. Line #43 $317. Line #46 $5,183. Line #50 $15. Line #51 $244. Line #52 $1,331. Line #53 $210. Line #54 $363. Line #55 $330. Line #62 $16,427. Line #70 $1,582. Line #71 $948. Line #76 $972. Line #81 $151,461. Line #84 $2,937. Line #85 $45. Total adjustment reduce budgets $223,816, appropriate from Free Cash $113,739, reduce State Aid ($103,555), balance $234,000 to cover FY 03 Choice/Charter shortfall.

ARTICLE 3. To see if the Town will vote to appropriate from available funds, the sum of $25.00, or some other sum or sums, for payment of prior year expenses, or take any other action relative thereto. *Board of Selectmen recommends approval.* VOTED UNANIMOUSLY to raise and appropriate $25.00.

ARTICLE 4. To see if the Town will vote to appropriate the sum of $1,540,550.00 to fund the construction and/or renovation of the heating system at the Thomas Passios Elementary School and Lunenburg High School including asbestos abatement, oil tank removal and new electrical service, and; to fund this appropriation, to authorize the Town Treasurer, with the approval of the Board of Selectmen, to borrow up to $1,540,550.00 and to issue bonds and notes, therefore in accordance with the provisions of MGL Chapter 44; or take any other action relative thereto. *Board of Selectmen and Finance Committee recommend approval.* DECLARED 2/3rds

ARTICLE 5. To see if the Town will vote to authorize the Board of Selectmen to petition the General Court for a special act amending the Town Charter as follows; provided, however, that the General Court may make clerical or editorial changes of form only to bill, unless the Board of Selectmen approve amendment to the bill before enactment by the General Court; and provided further that the Board of Selectmen is hereby authorized to approve amendments which shall be within the scope of the general public objectives of this petition; or take any other action relative thereto: An Act Relative to the Charter of the Town of Lunenburg

Section 1. The Charter of the Town of Lunenburg, which is on file in the archivist of the commonwealth, as provided in section 12 of Chapter 43B of the General Laws, is hereby amended by deleting from the second sentence of paragraph four of Section 4-1 the words, "or appointive".

Section 2. This act shall take effect upon passage. *Board of Selectmen recommends approval. Article 5 was* DEFEATED

ARTICLE 6. To see if the Town will vote to authorize the Town to enter into a 4-year lease for the purchase of the Fire Department Ambulance in accordance with the Capital Plan; or take any other action relative thereto. *Board of Selectmen and Finance Committee recommend approval.* VOTED UNANIMOUSLY

The Annual Town Meeting reconvened at 10:10 AM

ANNUAL TOWN MEETING WARRANT

ARTICLE 1. To see if the Town will vote to hear and/or accept the regular written reports of the Town Officers and Committees; or take any other action relative thereto. VOTED UNANIMOUSLY Capital Planning and Master Plan reports heard.

ARTICLE 2. To see if the Town will vote to authorize the Treasurer and Collector pursuant to MGL Chapter 44, §53F, with the approval of the Selectmen, to enter into compensating balance agreements with banking institutions in the Commonwealth of Massachusetts; or take any other action relative thereto. *Board of Selectmen and Finance Committee recommend approval.* VOTED UNANIMOUS CONSENT

ARTICLE 3. To see if the Town will vote to raise and appropriate or transfer from available funds all sums of money necessary to defray the charges and expenses of the Town for Fiscal Year 2004 and to fix the salaries and compensation of all elected officials of the Town and any other items included in the budget of the Finance Committee, or take any other action relative thereto. *Board of Selectmen & Finance Committee recommend approval.* VOTED UNANIMOUSLY to raise and appropriate the sum of $19,800,346.00, transfer from Article 7 of the 1993 ATM the sum of 30,000.00, transfer from the Sewer Enterprise Fund the sum of $20,000.00, transfer from Article 3 of the 1999 ATM Sewer Project the sum of $66,837.00, transfer from Sewer Betterments the sum of $173,730.00, transfer from the School Choice Special Revenue Fund the sum of $334,381.00, transfer from Septic Receipts Reserved for Appropriation the sum of $10,872.00, and transfer from Overlay Surplus the sum of $15,000.00.

FY 2004 Omnibus Budget as voted

LINE #		AMOUNT
	Maturing Debt & Interest	
1	Principal-Loans	$ 1,284,785.00
2	Interest -Loans	$ 824,597.00
3	Interest-Temporary Loans	$ 6,250.00
	Total Maturing Debt	$ 2,115,632.00
	Unclassified	
4	Liability Insurance	$ 142,952.00
5	Workers Compensation	$ 121,702.00
6	Group Health Insurance	$ 1,126,350.00
7	Group Life Insurance	$ 15,100.00
8	Physicals	$ 2,200.00
9	Print Town Reports	$ 7,500.00
10	Mont Reg Planning Assess	$ 2,287.00
11	Historical Commission	$ 958.00
12	Public Buildings	$ 300.00
13	Reserve Fund	$ 50,000.00
13A	Salary Reserve Fund	$ 9,200.00
14	Unemployment Expense	$ 5,000.00
15	FICA Town's Share	$ 128,000.00
16	MacGregor Pension	$ 616.00
	Total Gen Gov Unclassified	$ 1,612,165.00
	General Government	
17	Finance Comm Expense	$ 500.00
18	Annual Town Audit	$ 19,500.00
19	Selectmen's Admin	$ 89,717.00

LINE #		AMOUNT
50	Civil Defense	$ 907.00
51	Wiring Inspector	$ 15,206.00
52	Building Inspector	$ 82,994.00
53	Plumbing/Gas Inspector	$ 13,053.00
54	Animal Control	$ 23,817.00
	Subtotal Other Protection	$ 135,977.00
	Total Protection	$ 1,495,521.00
	Health & Sanitation	
55	General Health Expense	$ 20,562.00
56	Nashoba Board of Health	$ 25,148.00
57	Nashoba Nursing	$ 7,396.00
58	Mental Health	$ 5,000.00
59	Animal Inspector Salary	$ 600.00
	Total Health & Sanitation	$ 58,706.00
	Dept of Public Works	
60	Highway Labor	$ 376,667.00
61	Highway OT	$ 1,000.00
62	General Highway Mtc	$ 37,005.00
63	Town Highway Garage	$ 5,300.00
64	Street Lights	$ -
65	Traffic Signs & Devices	$ 5,000.00
66	Vehicle Mtc. - Highway	$ 48,344.00
67	Vehicle Mtc. - Police	$ 20,000.00
68	Vehicle Mtc. - Fire	$ 10,000.00
69	Vehicle Mtc. - School	$ 3,000.00

LINE #		AMOUNT
20	Selectmen Salaries	$ 4,500.00
21	C.A.F.O. Salary	$ 75,000.00
22	C.A.F.O. Expense	$ 5,615.00
23	Town Accountant	$ 107,034.00
24	Treasurer's Admin	$ 61,143.00
25	Banking Charges	$ 6,800.00
26	Tax Collector's Admin	$ 67,447.00
27	Assessor's Salaries	$ 2,700.00
28	Assessor's Admin	$ 96,735.00
29	Sealer of Wghts & Meas	$ 2,310.00
30	Technology Director	$ 147,000.00
31	Computer Advisory Comm	$ -
32	Legal Expenses	$ 25,000.00
33	Town Clerk Salary	$ 12,360.00
34	Town Clerk's Admin	$ 27,895.00
35	Elections	$ 7,624.00
36	Registration & Census	$ 9,015.00
37	Planning Board	$ 35,474.00
38	Zoning Board of Appeals	$ 3,228.00
39	Conservation Commission	$ 40,364.00
40	Personnel Committee	$ -
	Total General Government	$ 846,961.00
	Central Purchasing	
41	Central Purchasing	$ 131,005.00
	Total Central Purchasing	$ 131,005.00
	Protection	
42	Police Department	$ 845,308.00
43	Police Lock Up	$ 19,800.00
44	Injury Leave	$ 2,500.00
45	Police/Fire Medical Exp	$ 2,000.00
	Subtotal Police	$ 869,608.00
46	Fire Department	$ 324,495.00
47	Fire Hydrant Expense	$ 13,800.00
48	Radio Equipment Mtc.	$ -
49	Radio Watch	$ 151,641.00
	Subtotal Fire Dept.	$ 489,936.00

LINE #		AMOUNT
70	Director Facilities/Grounds	$ 58,622.00
71	Park Department	$ 62,255.00
72	Cemetery Department	$ 38,134.00
73	Tree Removal	$ 7,000.00
74	Solid Waste	$ 345,000.00
75	Snow Removal Expense	$ 135,000.00
	Total DPW	$ 1,152,327.00
	Public Assistance	
76	Council on Aging	$ 60,591.00
	Subtotal C.O.A.	$ 60,591.00
77	Veterans' Benefits	$ 500.00
78	Veteran's Administration	$ 4,833.00
79	Registrar of Vets' Graves	$ 100.00
80	Memorial Day	$ 360.00
	Subtotal Veterans	$ 5,793.00
	Total Assistance	$ 66,384.00
	Schools	
81	School Department	$ 12,460,343.00
82	School Transportation	$ -
83	Monty Tech Assess	$ 325,000.00
	Total Schools	$ 12,785,343.00
	Library	
84	Ritter Memorial Library	$ 188,122.00
	Total Library	$ 188,122.00
	Recreation	
85	Band Concerts	-
	Total Recreation	$ -
	Total Omnibus	$ 20,452,166.00

ARTICLE 4. To see if the Town will vote to raise and appropriate or transfer from available funds, or borrow the sum of $198,970.00 for the FY'04 Capital Plan (as appearing in the Capital Planning Financial Report); or take any other action relative thereto. *Board of Selectmen & Finance Committee recommend approval.* VOTED UNANIMOUSLY to raise and appropriate the sum of $118,589.00 and transfer from Article 9 of the 10/02 Special Town Meeting Capital Improvement Fund the sum of $75,000.00 for Capital Expenditures for Ambulance (Fire Department), Jaws of Life (Fire Department), Fire Hose (Fire Department), Cruiser (Police Department), Radio System (Public Safety), Renovate Office Space (Selectmen/Accountant), Copier Lease (Town Hall-Board of Selectmen), Computer Replacement Plan (Technology Department), Deed Analysis (Technology Department), and Truck (School).

ARTICLE 5. To see if the Town will vote to raise and appropriate or transfer from available funds an additional $5,000 for the celebration of the 275th Anniversary of the Incorporation of the Town of Lunenburg, to place such appropriation into a special fund established by the Town as authorized by special legislation approved at the FY01 Annual Town Meeting; or take any other action relative thereto. *Board of Selectmen recommend approval, Finance Committee recommends disapproval. Article 5 was PASSED OVER.*

ARTICLE 6. To see if the Town will authorize the establishment of a revolving fund in accordance with MGL Chapter 44, §53E½ to receive funds from Municipal Lien Certificate Requests up to $5,000.00; said funds to be expended for the purpose of offsetting the cost incurred in providing said certificates at the discretion of the Tax Collector, expenditures from the revolving fund may not exceed $5,000.00 during the Fiscal Year without the approval of the Board of Selectmen and the Finance Committee or take any other action relative thereto. *Submitted by petition. Board of Selectmen recommend approval, Finance Committee recommends disapproval.* VOTED

ARTICLE 7. To see if the Town will re-authorize the establishment of a revolving fund in accordance with MGL Chapter 44, §53E½ to receive funds from library fines and penalties, donations and bequests up to $8,000: said funds to be expended for the purchase of library and information materials and document information and electronic data delivery charges at the discretion of the Trustees of Ritter Memorial Library, expenditures from the revolving fund may not exceed $8,000 during the fiscal year without the approval of the Board of Selectmen and Finance Committee; or take any other action relative thereto. *Board of Selectmen and Finance Committee recommend approval.* VOTED UNANIMOUS CONSENT

ARTICLE 8. To see if the Town will vote to re-authorize the establishment of an ambulance billing revolving fund in accordance with MGL Chapter 44, §53E½. The purpose of this fund will be to cover the cost associated with compensating third party advanced life support companies and third party billing companies that contract and supply services to the town. Five per cent (5%) of the total revenue generated by ambulance services rendered and 100% of the revenue generated by Advanced Life Support services rendered shall be deposited into said revolving fund. The proceeds of said Revolving Fund shall be expended by the Fire Department without further appropriation for the sole purpose of reimbursing the aforementioned companies for services rendered to the town; expenditures from the revolving fund may not exceed $50,000 during the fiscal year without the approval of the Board of Selectmen and Finance Committee or take any other action relative thereto. *Board of Selectmen and Finance Committee recommend approval.* VOTED UNANIMOUS CONSENT

ARTICLE 9. To see if the Town will vote to re-authorize a MGL Chapter 44, §53E½ revolving fund, such fund to be credited with the proceeds of sale by the Conservation Commission of the rights to harvest timber; funds in the account to be expended for the acquisition of land for conservation purposes and associated costs of such acquisitions, including but not limited to appraisals and payment of accrued taxes; such funds may also be expended for improvements on land already under the custody and control of the Conservation Commission; the Conservation Commission may expend such funds without further appropriation; expenditures from the revolving fund may not exceed $5,000 during the fiscal year without the approval of the Board of Selectmen and Finance Committee; or take any other action relative thereto. *Board of Selectmen and Finance Committee recommend approval.* VOTED UNANIMOUS CONSENT

ARTICLE 10. To see if the Town will vote to re-authorize in accordance with MGL Chapter 44, §53E½, the Special Detail Revolving Fund, for the purpose of paying special detail salaries for outside functions. Charges and money received from outside organizations in connection with this program are to be deposited in said revolving fund and expended by the Lunenburg School Committee without further appropriation for the sole purpose of paying personnel for hours worked. Said revolving account expenditures shall not exceed $25,000 per year without the approval of the Board of Selectmen and Finance Committee; or take any other action relative thereto. *Board of Selectmen and Finance Committee recommend approval.* VOTED UNANIMOUS CONSENT

ARTICLE 11. To see if the Town will vote to re-authorize in accordance with MGL Chapter 44, §53E½, the Greenthumb Revolving Fund, to support the Greenthumb Program at Lunenburg High School. Fees, charges, and money reserved from sales of items in connection with this program are to be deposited in this Revolving Fund Account and expended for the operation of this program by the Lunenburg School Committee without further appropriation; said revolving account expenditures shall not exceed $10,000 per year without the approval of the Board of Selectmen and Finance Committee; or take any other action relative thereto. *Board of Selectmen and Finance Committee recommend approval.* VOTED UNANIMOUS CONSENT

ARTICLE 12. To see if the Town will vote to re-authorize in accordance with MGL Chapter 44, §53E½, the Council on Aging\Montachusett Area Regional Transit (MART) Elderly Transportation Revolving Fund; the operation of said account shall be conducted by the Council on Aging, and the Senior Center Director; funds in this account shall be spent on the dispatch, operation, maintenance and record keeping of the MART vehicles for the elderly transportation program; all receipts resulting from MART reimbursements shall be credited to this account; said revolving account expenditures shall not exceed $26,000 per year without the prior approval of the Board of Selectmen and the Finance Committee; or take any other action relative thereto. *Board of Selectmen and Finance Committee recommend approval.* VOTED UNANIMOUS CONSENT

ARTICLE 13. To see if the Town will vote to raise and appropriate or transfer from available funds a sum of money to operate the Water Department; or take any other action relative thereto. *Board of Selectmen and Finance Committee recommend approval.* VOTED UNANIMOUSLY to raise and appropriate $1,975.00.

ARTICLE 14. To see if the Town will vote to raise and appropriate or transfer from available funds a sum of money to operate the Sewer Department; or take any other action relative thereto. *Board of Selectmen and Finance Committee recommend approval.* VOTED UNANIMOUSLY to raise and appropriate $417,800.00.

ARTICLE 15. To see if the Town will vote to raise and appropriate or transfer from available funds a sum of money to operate the Solid Waste / Recycling Collection, Disposal Program; or take any other action relative thereto. *Board of Selectmen and Finance Committee recommend approval.* VOTED UNANIMOUSLY to appropriate $180,000.00.

ARTICLE 16. To see if the Town will vote to continue participation in the Central Massachusetts Mosquito Control Project; or take any other action relative thereto. *Board of Selectmen and Finance Committee recommend approval.* VOTED UNANIMOUSLY

ARTICLE 17. To see if the Town will vote to raise and appropriate or transfer from "Free Cash" a sum of money for the Stabilization Fund; or take any other action relative thereto. *Board of Selectmen recommendation @ Town Meeting, Finance Committee recommends approval.* Article 17 was PASSED OVER.

ARTICLE 18. To see if the Town will vote to amend Town By-Law Article I, Section 1., by deleting "Janice's Take Out" and replacing with "Powell Stone & Gravel Co., Inc."; or take any other action relative thereto. *Board of Selectmen recommends approval.* VOTED UNANIMOUS CONSENT

ARTICLE 19. To see if the Town will vote to amend the Protective By-Law of the Town of Lunenburg by adding to Section 2.0, Definitions by inserting after Section 2.1.1.32 the following new sections:

Section 2.1.1.33 Private Way: Any way that is not a "public way" as defined by this By-Law.

Section 2.1.1.34 Public Way: A way over which the public is entitled to pass, and which has been either 1) laid out and accepted as public in the manner prescribed in statute or 2) dedicated to perpetual public use by its owner prior to 1846 or 3) made public by prescription, as adjudged by a Massachusetts court.

Section 2.1.1.35 Right of Way: 1) A way serving property other than that on which it is located; or 2) a right held by one or more parties to pass over land of another.

And to re-number the previous Section 2.1.1.33 as Section 2.1.1.36 and all subsequent sections accordingly; or take any other action relative thereto. *Submitted by the Planning Board. Board of Selectmen recommends approval.* VOTED 2/3rds DECLARED

ARTICLE 20. To see if the Town will vote to amend the Protective By-Law of the Town of Lunenburg by deleting Section 7.0 entitled Non-Conforming Uses and add a new Section 7.0 Non-conforming Uses, Structures and Lots and to delete Section 5.1.6.1 and renumber sections as described in text of file with the Town Clerk's Office and incorporate the former wording of Section 5.1.6.1 into the new Section as Section 7.1.; or take any other action relative thereto. *Submitted by the Planning Board. Board of Selectmen recommends approval.* VOTED 2/3rds DECLARED as follows:

7.0 Non-Conforming Uses, Structures and Lots

7.1 Non-Conforming Lots Increased requirements respecting lot area, frontage, width, yard and similar dimensions provided in this Bylaw or amendments thereto shall be subject to the exceptions provided in Section 6 of Chapter 40A of the General Laws and shall not apply to a lot for single and two-family residential use which at the time of the recording or endorsement, whichever occurs sooner, was not held in common ownership with adjoining land, conformed to the then existing requirements and had less than the proposed requirement but had at least five thousand (5000) square feet of area and fifty (50) feet of frontage.

7.2 Building, Structures and Uses already in Existence; Abandonment

7.2.1. A non-conforming building or structure, or a non-conforming use of a building, structure or land, which has been abandoned, or which has not been used for more than a period of two (2) years shall not be resumed, provided that where the non-conforming use is agriculture, horticulture or floriculture, non-use shall not constitute abandonment under this Bylaw, and the non-conforming use may otherwise be resumed, unless such non-use was maintained for a period of more than five (5) years.

7.2.1.2 Voluntary demolition of a non-conforming structure without permission of the Zoning Board of Appeals shall constitute abandonment.

7.3 Non-conforming Uses

7.3.1. A lawfully non-conforming use of a building, structure, or land shall not be altered, extended, changed or substantially extended, except to a conforming use, unless authorized by the board of appeals pursuant to 7.3.2.

7.3.1.1. Alterations to a legally non-conforming use that: a) do not reflect the nature and purpose of the original use; or b) result in a use different in quality, character, or degree from the original use and not ordinarily and reasonably adapted to the original use; or c) result in a use that is different in kind in its effect on the neighborhood than the original use, shall constitute a change or substantial extension of the original use.

7.3.1.2. A non-conforming use has been substantially extended if the total of all floor area plus open ground area devoted to such use on the premises has been increased by more than fifty (50) percent over the total so devoted at the time the use first became non-conforming. This Section shall not apply to residential use of single and two-family structures.

7.3.2 No non-conforming use shall be extended, altered, or changed unless approved via a special permit issued by the Zoning Board of Appeals upon its finding that such extension, alteration or change will not be substantially more detrimental than the existing non-conforming use to the neighborhood.

Non-conforming Structures

7.4.1. Except as provided in Section 7.4.2., a lawfully non-conforming building or structure shall not be reconstructed, extended or altered except pursuant to special permit issued by the Zoning Board of Appeals upon its finding that such reconstruction, extension or alteration will not be substantially more detrimental than the existing non-conforming structure to the neighborhood.

7.4.1.1. Any reconstruction, extension or alteration of a non-conforming structure that increases an existing nonconformity or results in the creation of an additional nonconformity shall require a variance from the Zoning Board of Appeals in addition to the finding set forth in Section 7.4.1.

7.4.2. Reconstruction, extension, alteration or structural change to a single-or two-family residential, non-conforming structure, may be allowed, upon a determination provided that such reconstruction, extension, alteration, or structural change meets all current zoning requirements, is not more substantially detrimental to the neighborhood, and does not increase the non-conforming nature of the structure.

7.4.2.1 Notwithstanding Section 7.4.2. reconstruction, extension, alteration or structural change (collectively "alteration") of a single-or-two family residential, lawfully non-conforming structure shall be deemed not to increase the non-conforming nature of said structure and shall be eligible for a building permit without review by the Zoning Board of Appeals, if:

a) the structure is located on a conforming lot and the proposed alteration will comply in all respects with the Bylaw, or

b) the structure is located on a lawfully non-conforming lot, and the proposed alteration will retain the structure's existing footprint, will not increase an existing non-conformity or result in the creation of an additional non-conformity and will not increase the total cubic feet of the structure.

7.4.2.2 Reconstruction, extension, alteration or structural change to a single-or two-family residential, lawfully non-conforming structure located on a non-conforming lot, that increases the total cubic feet of that structure, shall constitute an increase in the non-conforming nature of said structure.

7.4.3. No reconstruction, extension, or alteration to a non-conforming structure shall be permitted that results in lot coverage greater than thirty percent (30%), except for determination by the Zoning Board of Appeals.

7.4.4. No conforming building or structure devoted to a non-conforming use (whether in whole or in part) shall be moved, reconstructed, replaced or substantially altered, except as authorized by a finding of the Zoning Board of Appeals, pursuant to Section 7.4.1.

A building or structure devoted to a non-conforming use (whether in whole or in part) and a building or structure non-conforming as to height, setback or yards may, if damaged or destroyed by fire or other accidental cause, be repaired or reconstructed within the same portion of the lot, to the same or lesser dimensions, and used as before, without a finding as provided in either Section 7.4.1 or Section 7.4.2, provided that such repair or reconstruction is substantially completed within two (2) years of said damage or destruction, otherwise, such building shall be repaired, reconstructed and used only in conformity with the provisions of this Bylaw. The Board of Appeals may, however in a specific case, authorize the extension of the two (2) year time limit or authorize a special exception from the requirement of conformity, where, in the opinion of the Board, such limit or requirement will impose undue hardship.
Submitted by the Planning Board. Board of Selectmen recommends approval.

ARTICLE 21. To see if the Town will vote to amend the Lunenburg Zoning By-Law so as to amend the Zoning Map to place two parcels of land located at 53 Massachusetts Avenue, and shown on Lunenburg Assessors Map 71 as Parcels 117 and 121, into the Commercial District; or take any other action relative thereto. *Board of Selectmen recommends approval.* VOTED 2/3rds DECLARED as follows:

TRACT 1; a certain parcel of land, with the buildings thereon, situated on the northerly side of Massachusetts Avenue, Lunenburg, Massachusetts, shown as Lot 1 on a plan of land entitled "Land in Lunenburg, MA Surveyed for Eugene C. & Alice m. Heikkila, Date: April, 1991, James E. Gaffney Co. Professional Land Surveyor", recorded with the Worcester Northern District Registry of Deeds in Plan Book 350, Page 12, and being more particularly bounded and described according to said plan as follows: Beginning at the southeasterly corner of said parcel; thence North 07° 37' 00" East by land now or formerly of J. Robert & Madeleine M. Fallon 273.88 feet to a point; thence North 07° 53' 11" East by land of Fallons 397.70 feet to a point; thence North 84° 07' 11" East by land of Fallons 120.12 feet to a point; thence North 01° 52' 57" East by land now or formerly of R.I.W. Realty Trust 155.64 feet to a point; thence South 82° 06' 49" West by Parcel "A" shown on said plan 321.45 feet to a point; thence South 07° 53' 11" East by Parcel "A" 341.82 feet to a point; thence North 82° 06' 49" East 125.00 feet to a point; thence South 07° 37' 00" East by land now or formerly of Rollstone Realty Trust 293.92 feet to a point thence Northeasterly along the northerly sideline of Massachusetts Avenue 53.94 feet to the point of beginning. Lot 1 contains 2.403 acres of land according to said plan

TRACT II; a certain parcel of land situated northerly of Massachusetts Avenue, Lunenburg, Massachusetts, shown as Parcel "A" on a plan of land entitled "Land in Lunenburg, MA Surveyed for Eugene C. & Alice M. Heikkila, Date: April, 1991, James E. Gaffney Co. Professional Land Surveyor", recorded with the Worcester Northern District Registry of Deeds in Plan Book 350, Page 12, and being more particularly bounded and described according to said plan as follows: Beginning at the southeasterly corner of said parcel; thence South 82° 10' 55" West by land now or formerly of Rollstone Realty Trust and land now or formerly of Eugene C. & Alice M. Heikkila 280.00 feet to a point; thence North 07° 15' 52" West by Lawton Avenue and land now or formerly of Arvo A. & Ida S. Raisanen 88.52 feet to a point; thence North 07° 50' 58" West by land now or formerly of David Alzapiedi 251.63 feet to a point; thence North 09° 31' 58" West by land of Alzapiedi 264.65 feet to a point; thence North 11° 46' 45" West by land now or formerly of Klondike Corp. 88.88 feet to a point; thence North 79° 17' 02" East by land now or formerly of R.I.W. Realty Trust 30.57 feet to a point; thence South 89° 08' 26" East by land of R.I.W. Realty Trust 47.24 feet to a point; thence South 83° 14' 08" East by land of R.I.W. Realty Trust 30.69 feet to a point; thence North 82° 25' 55" East by land of R.I.W. Realty Trust 196.70 feet to a point; thence North 82° 41' 07" East by land of R.I.W. Realty Trust 207.78 feet to a point; thence South 01° 52' 57" West by land of R.I.W. Realty Trust 132.13 feet to a point; thence South 82° 06' 49" West by Lot 1 shown on said plan 321.45 feet to a point; thence South 07° 53' 11" East by Lot 1 shown on said plan 341.82 feet to a point; thence North 82° 06' 49" East by Lot 1 shown on said plan 125.00 feet to a point; thence South 07° 53' 11" East by Lot 1 shown on said plan 205.00 feet to a point of beginning.
Parcel "A" contains 4.626 acres of land according to said plan.

The above described premises are conveyed subject to a right to pass and repass, and a right to install and maintain poles and wires and other utilities, as set forth in a deed from Raymond Grondin to Rollstone Realty Trust recorded with the Worcester Northern District Registry of Deeds in Book 1242, Page 150.

TRACT III; a certain parcel of land situated northerly of Massachusetts Avenue, Lunenburg, Massachusetts, shown as Parcel 1 on a plan of land entitled "Land of Lunenburg, MA Surveyed for Eugene C. & Alice M. Heikkila, Date: Dec., 1997, James E. Gaffney Co. Professional Land Surveyor", recorded with the Worcester Northern District Registry of Deeds in Plan Book 392, Page 21, and being more particularly bounded and described according to said plan as follows: Beginning at the northwesterly corner of said parcel; thence North 82° 10' 55" East by Parcel "A" 120.00 feet to a point; thence South 07° 37' 00" East by land now or formerly of Rollstone Realty Trust 30.00 feet to a point; thence South 82° 10' 55" West by Lot 1 shown on said plan 120.00 feet to a point; thence North 07° 37' 00" West by land now or formerly of Eugene C. & Alice M. Heikkila and Lawton Avenue 30.00 feet to the point of beginning. Parcel 1 contains 3,600 square feet of land according to said plan. The above described premises are conveyed subject to restrictions as set forth in a deed from Rollstone Realty Trust to Eugene C. and Alice M. Heikkila recorded with the Worcester Northern District Registry of Deeds in Book 1316, Page 427.

Except that the following land shall remain as Residence "A": Beginning at a point at the northeasterly corner of the parcel at the northwesterly corner of land now or formerly of John I. & Ruth Ann White and in the line of land now or formerly of David R. & Kathleen M. Remse: Thence South 01° 52'57" West by said White land two hundred eighty seven and 77/100 (287.77') feet to a point at land now or formerly of KMOF Enterprises LLC: Thence South 84° 7'11" West by said KMOF Enterprises LLC land one hundred (100.00) feet to a point: Thence North 01° 52'57" East one hundred eighty five and 26/100 (185.26') feet to a point: Thence South 82° 42'07" West one hundred seven and 41/100 (107.41') feet to a point: Thence North 01° 52'57" East one hundred (100.00') feet to a point at land of said Remse: Thence North 82° 42'07" East by said Remse land two hundred seven and 78/100 (207.78') feet to the point of beginning. Containing 38,992 Square feet.
The above described three tracts of land are the same premises conveyed to Gary B. Lorden and Heidi M. Lorden by a deed dated June 28, 2002 from Eugene C. Heikkila and Alice M. Heikkila recorded with the Worcester Northern District Registry of Deeds in Book 4243, Page 21.

ARTICLE 22. To see if the Town will vote to amend the Lunenburg Zoning By-Law so as to amend the Zoning Map to shift a certain parcel of land that is now Residence A into Commercial. A certain parcel of land located off Whalom Road, Lunenburg Massachusetts, as shown as Parcel C, on a "Plan of Land in Lunenburg, Massachusetts, Scale 1 in. = 50ft., August, 2002, Prepared for Daniel C. Proctor by Dillis and Mische, Inc., Registered Prof. Land Surveyors, P.O. Box 99, Ayer MA 01432," said parcel containing 34,709 square fee (.80 acres) according to said Plan, recorded and on file in the Northern Worcester District Registry of Deeds at Plan Book 432, Page 6. This boundary shift shall not include

therefrom the "access strip" so called, abutting John Street, which strip measures 20' by approximately 170', bordered on the south by land now or formerly of Gosselin; on the west by the easterly boundary of John Street; on the north by land now or formerly of Ramondelli, and on the east by a line contiguous to, and parallel with the westerly boundary of parcel C, which boundary run North 28° 56' 29" West. Deed recorded in Northern Worcester District Registry of Deeds at Book 4517, Page 84; or take any other action relative thereto. *Board of Selectmen recommend approval.* VOTED 2/3rds DECLARED

ARTICLE 23. To see if the Town will direct the Town Meeting Moderator to appoint a 7 person committee to be known as the "Town Right of Ways Committee" on or before May 10, 2003. Said committee shall have the following responsibilities:

1. Define "Public Right of Way"
2. Define "Private Right of Way"
3. Define the criteria needed to legally identify the locus of a "Right of Way"
4. Define the criteria that a replacement "Right of Way" shall meet relative to the "Right of Way" being replaced
5. Recommend what town department should screen building applications to detect possible compromising of "Existing Right of Ways"
6. Propose needed "Town Right of Ways" necessary to access trapped town land
7. Propose solutions to other problems that arise in this area over the next year

Said committee shall report their findings to the next annual town meeting; or take any other action thereto. *Submitted by petition. Board of Selectmen recommends disapproval.* Article 23 was DEFEATED.

ARTICLE 24. To see if the Town will vote to amend Lunenburg Town By-Law Article II Section 12 by deleting the old fee schedule related to Weights and Measures and inserting in its place the new fee schedule (on file in the Town Clerk's Office); or take any other action relative thereto. *Board of Selectmen and Finance Committee recommend approval.* VOTED UNANIMOUSLY as follows:

FEE SCHEDULE	DEVICE	LEGAL SEALING
Balances & Scales	Over 10,000 lbs	$100.00
	>5,000 to 10,000 lbs	$50.00
	>1,000 to 5,000 lbs	$40.00
	100 to 1,000 lbs	$30.00
	>10 lbs/<100 lbs	$15.00
	10 lbs or less	$10.00
Weights	Avoirdupois (Set)	$15.00
	Metric (Set)	$15.00
	Apothecary (Set)	$15.00
	Troy (Set)	$15.00
Capacity Measures	Vehicle Tanks	$100.00
	Each Indicator	$25.00
	Each 100 gal. Or %	$25.00
	Liquid; 1 gallon or less	$10.00
	Liquid; >than 1 gallon	$10.00
Liquid Measuring Meters	Oil, Grease	$15.00
	Gasoline	$15.00
	Vehicle Tank Pump	$30.00
	Vehicle Tank Grav.	$30.00
	Propane (LPG)	$30.00
	Bulk Storage	$75.00
	Company Prover	$100.00
Pumps	Each stop on pump	$10.00
Other Devices	Retail Scanners (3, 11, 12+)	$100.00, $200.00, $250.00
	Taxi Meters	$25.00
	Odometers	$25.00
	Leather Meas. (Sem)	$10.00

	Fabric Measuring	$10.00
	Wire-Rope-Cord	$10.00
Linear Measures	Yard Sticks	$5.00
	Tapes	$5.00
	Wheel Measures	$25.00
	Surveyors Measures	$25.00
Miscellaneous	Milk Jars (Per Gross)	$25.00
	Dry Measures	$10.00
	Bottle Return	$10.00
	Wood, Bark Measures	$25.00
	Sand, Loam Measures	$25.00
	Adjusting	$10.00
	Retest	$20.00
	Non-Res. Surcharge	$20.00
	Special Facilities	$20.00/Cost
	Repairs	Cost

ARTICLE 25. To see if the Town will implement the use of TV cameras and the use of Town Hall for coverage of town meetings, including, but not limited to the following meetings:

Planning Board
Finance Committee
School Committee
Board of Health
Selectmen

And that a videotape of these meetings be given to the Ritter Memorial Library; or take any other action relative thereto. *Submitted by petition. Board of Selectmen and Finance Committee recommend disapproval.* Article 25 was PASSED OVER.

ARTICLE 26. To see if the Town will vote to accept as a Town Way, Old Farm Road, as shown on file in the Town Clerk's Office entitled "As-built Plan-Maplewood Estates, Owner: A and S Realty Trust", dated December 2002 and being plan L-5018X by David E. Ross Associates, Inc. said Old Farm Road, Lots 1-11 and related Easements are shown in their entirety on a plan entitled, "Maplewood Estates – A Definitive Subdivision in Lunenburg, Mass. – Lot Layout", being Plan No. L-5018 by David E. Ross Associates, Inc. dated November 1998 and endorsed by the Town of Lunenburg Planning Board on February 1, 1999; or take any other action relative thereto. *Board of Selectmen recommends approval.* VOTED UNANIMOUSLY

Meeting adjourned at 1:30 PM.

SPECIAL TOWN MEETING WARRANT – JULY 28, 2003

The Special Town Meeting was called to order at 7:25 PM in the Lunenburg High School Auditorium. The call to the meeting was read by the Town Clerk. The Moderator gave thanks to all who worked for the Town before the Pledge of Allegiance was recited.

ARTICLE 1. To see if the Town will vote to appropriate, and authorize the Treasurer with the approval of the Selectmen as allowed under MGL Chapter 44, Section 8C as amended to borrow the sum of $220,000, for the purpose of purchasing for conservation and passive recreation purposes, by eminent domain or negotiated purchase or otherwise, a certain property, known as "Zwerling Property" – Containing 9.82 acres of forest land on Mulpus Road as shown on plan entitled "Plan of Land in Lunenburg, Massachusetts, by David Ross and Associates dated March 2003"; that said land shall be conveyed to the Town of Lunenburg under the provisions of MGL Chapter 40, Section 8C as amended and other Massachusetts statues relating to conservation to be managed and controlled by the Lunenburg Conservation Commission, subject to the Conservation Commission being authorized to make application on behalf of Lunenburg for grants and reimbursements from the Commonwealth of Massachusetts deemed necessary for grants and reimbursements under the self help act (MGL Chapter 132A, Section 11, as amended). The Town of Lunenburg and the

STM 7/03 (cont.)

Conservation Commission is hereby authorized to enter into any and all agreements necessary to execute said purchase, or take any other action relative thereto. *Board of Selectmen – no recommendation; Finance Committee recommends disapproval.* Article 1 was DEFEATED (voted YES – 115, NO – 153; a 2/3rds majority was required for passage).

ARTICLE 2. To see if the Town will vote to authorize the Town to enter into a multi-year lease for the purchase of the Artificial Turf for the Lunenburg Track and Athletic Field; or take any other action relative thereto. *Board of Selectmen & Finance Committee recommend approval.* VOTED UNANIMOUSLY to authorize a Lease/Purchase for up to ten (10) years, funding to be by gift of the Lunenburg Track and Athletic Field Association annually not to exceed the amount of $25,000.00.

Meeting adjourned at 9:00 PM.

SPECIAL TOWN MEETING WARRANT – OCTOBER 7, 2003

The Special Town Meeting was called to order at 7:30 PM, October 7, 2003 in the Lunenburg High School Auditorium. The call to order was delayed for 1/2 hour due to the number of attendees (622). The call to the meeting was read by the Town Clerk and the Pledge of Allegiance was recited.

ARTICLE 1. To see if the Town will vote to appropriate the sum of $ 3,993,148.00 to design, construct and furnish a new public library, and; to fund said appropriation as follows: $2,193,148.00 in grants and donations, and to authorize the Treasurer, with the approval of the Board of Selectmen, to borrow up to $1,800,000.00 and, to issue bonds and notes therefore, in accordance with the provisions of M.G.L. Chapter 44 or any other enabling authority, contingent upon the passage of a debt exclusion override of Proposition 2 ½ by the voters of the Town of Lunenburg; and to further authorize the Board of Selectmen and a Library Building Committee to accept the Massachusetts Board of Library Commissioners grant of $1,782,563.00 and any other funds raised for the building of the new library; or take any other action relative thereto. Board of Selectmen and Finance Committee recommend approval. VOTED 2/3rds DECLARED

ARTICLE 2. To see if the Town will vote to establish a Library Building Committee, in compliance with Article XVII of the By-laws of the Town of Lunenburg; or take any other action relative thereto. VOTED

ARTICLE 3. To see if the Town will vote to accept as a Town Way, Windermere Drive, as shown in a plan on file in the Town Clerk and Board of Selectmen Offices entitled "Plan of Street Acceptance of land in Lunenburg, MA. Prepared for Daniel R. Pierce, August 19, 2003 by Whitman & Bingham Associates, Inc. Registered Professional Engineers & Land Surveyors, 510 Mechanic Street, Leominster, MA, 01453, Plan #27-D-24A"; or take any other action relative thereto. VOTED UNANIMOUSLY

ARTICLE 4. To see if the Town of Lunenburg will vote to appropriate from available funds a sum of money for the Stabilization Fund; or take any other action relative thereto. Board of Selectmen and Finance Committee recommend approval. VOTED UNANIMOUSLY to appropriate $68,000.00 from additional Cherry Sheet Aid.

ARTICLE 5. To see if the Town of Lunenburg will vote to amend the Protective Bylaw by adding the definition of Garden Apartment to Section 2.0. Definitions after the present Section 2.1.1.19. and renumbering the following definitions accordingly, the definition to read as follows:
"2.1.1.20. Garden Apartment: A structure with no more than three (3) stories, which structure shall contain no more than twenty-four (24) dwelling units"; or take any other action relative thereto. Article 5 was DEFEATED.

ARTICLE 6. To see if the Town of Lunenburg will vote to amend Section 4.2.3. of the Protective Bylaw by adding at the end of 4.2.3.1.a) 2 and Section 4.2.3.1.b) 3 to read:
"and/or garden apartments subject to Section 8.4. Development Plan Review"
And to amend Section 5.4. by adding at the beginning of Section 5.4.1.1.d) "Except for garden apartments". And by amending Section 5.5.1.2.b) after the words dwelling units, the following words: "except for Garden Apartments"; or take any other action relative thereto. Article 6 was PASSED OVER.

ARTICLE 7. To see if the Town of Lunenburg will vote to amend Section 5.0. of the Protective Bylaw by adding to Section 5.0. a new Section, 5.7., the new Section 5.7. to read as follows:
"5.7. Garden Apartments
5.7.1. The dimensional regulations contained in this Section shall apply to all permitted uses except for garden apartments in a Mixed Residential Development, a Planned Residential Area or the Lake Whalom Overlay District.
5.7.2. Garden Apartments in a Mixed Area of a Planned Residential Area shall be on a lot with a minimum of five (5) acres.
5.7.3. All other dimensional and design requirements for garden apartments shall be determined by the Planning Board in connection with the Development Plan Review and the Special Permit"; or take any other action relative thereto. Article 7 was PASSED OVER.

ARTICLE 8. To see if the Town of Lunenburg will vote to amend the Protective Bylaw by adding to the second b) in Section 4.12.5.2. the following:
And provided that
"unless approved by the Planning Board as a condition of a Special Permit"; or take any other action relative thereto. Article 8 was PASSED OVER.

Meeting adjourned at 8:45 PM.

ANNUAL TOWN ELECTION
SATURDAY MAY 17, 2003

** ELECTED	PREC A	PREC B	PREC C	PREC D	TOTAL
MODERATOR - For 3 years / Vote for One					
** Richard J. Bishop	349	286	296	279	1210
Blanks	105	73	126	92	396
TOTAL	454	359	422	371	1606
SELECTMEN - For 3 years / Vote for One					
Katherine L. Quenneville	131	133	127	104	495
** David W. Rodgers	311	220	288	264	1083
Blanks	12	6	7	3	28
TOTAL	454	359	422	371	1606
SELECTMEN - For 1 year / Vote for One					
** Daniel W. Cronin	299	249	265	278	1091
Blanks	155	110	157	93	515
TOTAL	454	359	422	371	1606
BOARD OF HEALTH MEMBER – For 3 years / Vote for One					
Carl E. B. Sund	201	176	196	162	735
** George L. Emond Jr.	212	162	192	177	743
Blanks	41	21	34	32	128
TOTAL	454	359	422	371	1606
ASSESSOR – For 3 years / Vote for One					
** Christopher M. Comeau	317	259	282	253	1111
Blanks	137	100	140	118	495
TOTAL	454	359	422	371	1606
SCHOOL COMMITTEE MEMBER – For 3 years / Vote for One					
** Jennifer E. Benson	210	186	201	173	770
Michael P. Clark	190	131	179	166	666
Blanks	54	42	42	32	170
TOTAL	454	359	422	371	1606
PARK COMMISSIONER – For 3 years / Vote for One					
** Jeffrey M. Johnson	330	262	303	269	1164
Blanks	124	97	119	102	442
TOTAL	454	359	422	371	1606
COMMISSIONER OF TRUST FUNDS – For 3 years / Vote for One					
** Lynn F. Sallee	332	259	292	266	1149
Blanks	122	100	130	105	457
TOTAL	454	359	422	371	1606
CEMETERY COMMISSIONER – For 3 years / Vote for One					
** Stanley W. Barney	337	275	306	279	1197
Blanks	117	84	116	92	409
TOTAL	454	359	422	371	1606

	PREC A	PREC B	PREC C	PREC D	TOTAL
LIBRARY TRUSTEE – For 3 years / Vote for Three					
** Linda J. Kennedy	298	250	281	261	1090
** Maryann Sudolnik	316	262	279	243	1100
** Gare F. Thompson	294	243	265	246	1048
Blanks	454	322	441	363	1580
TOTAL	1362	1077	1266	1113	4818
LIBRARY TRUSTEE – For 1 year / Vote for One					
** Brian P. Laffond	321	262	292	267	1142
Blanks	133	97	130	104	464
TOTAL	454	359	422	371	1606
PLANNING BOARD MEMBER – For 5 years / Vote for One					
** James A. Halloran	313	255	278	254	1100
Blanks	141	104	144	117	506
TOTAL	454	359	422	371	1606
HOUSING AUTHORITY MEMBER – For 5 years / Vote for One					
** James C. McKenna	320	256	277	258	1111
Blanks	134	103	145	113	495
TOTAL	454	359	422	371	1606

QUESTION 1.

Shall the Town of Lunenburg be allowed to exempt from the Provisions of Proposition 2½, so called, the amounts required to pay for the bond issued in order to construct and/or renovate the heating system at the Thomas Passios Elementary School and Lunenburg High School including asbestos abatement, oil tank removal and new electrical service.

	PREC A	PREC B	PREC C	PREC D	TOTAL
YES	246	183	219	227	875
NO	126	106	136	84	452
BLANKS	82	70	67	60	279
TOTAL	454	359	422	371	1606

SPECIAL TOWN ELECTION
OCTOBER 18, 2003

QUESTION 1. DEBT EXCLUSION

Shall the Town of Lunenburg be allowed to exempt from the Provisions of Proposition 2½, so called, the amounts required to pay for the bonds issued in order to design, construct and furnish a new public library?

	PREC A	PREC B	PREC C	PREC D	TOTAL
YES	423	252	344	395	1414
NO	158	197	155	139	649
BLANKS	0	2	3	0	5
TOTAL	581	451	502	534	2068

PAYROLL REPORT

EMPLOYEE		DEPARTMENT	GROSS
ADAM	INGRID	SCHOOL DEPARTMENT	$840.00
ADAMS	ANNE	SCHOOL DEPARTMENT	$65,893.93
ADAMS	CHAD	SCHOOL DEPARTMENT	$44,073.53
AGUIAR	MARIA	SCHOOL DEPARTMENT	$56,315.22
AHO	GEORGE	POLICE	$55,448.00
AKERMAN	KATHERINE	SCHOOL DEPARTMENT	$11,914.89
ALBERTI	JEANNE	SCHOOL DEPARTMENT	$52,719.71
ALVERSON-HILLMAN	KAY	SCHOOL DEPARTMENT	$62,149.64
ANDERSON	RUTH	TAX COLLECTORS OFFICE	$14,324.32
ARCHAMBAULT	STEVEN	SCHOOL DEPARTMENT	$56,258.92
ARO	DEBRA	SCHOOL DEPARTMENT	$21,998.60
ARSENAULT	MARK	SCHOOL DEPARTMENT	$14,314.38
ASHER	TAYLOR	SCHOOL DEPARTMENT	$1,671.78
AUBINGER-HEBERT	DORIS	SCHOOL DEPARTMENT	$276.50
AYLES	ROBERT	POLICE	$26,197.42
BAKER	AMANDA	SCHOOL DEPARTMENT	$36,455.80
BAKER	CAROL	FIRE DEPARTMENT	$120.23
BAKER	SAMANTHA	SCHOOL DEPARTMENT	$35.00
BALL	BELINDA	SCHOOL DEPARTMENT	$1,978.57
BARBERO	LAUREN	SCHOOL DEPARTMENT	$15,909.87
BARBIER	VICTORIA	SCHOOL DEPARTMENT	$47,551.36
BARNES	KATHRYN	SCHOOL DEPARTMENT	$3,238.85
BARNEY	MICHAEL	SCHOOL DEPARTMENT	$78,506.00
BARNEY	PATRICK	POLICE	$68,588.75
BARNEY	STANLEY	POLICE	$78,847.85
BARNEY	STEPHANIE	SCHOOL DEPARTMENT	$5,316.72
BARNEY	SUZANNE	SCHOOL DEPARTMENT	$27,720.67
BARNICOAT	KATHLEEN	SCHOOL DEPARTMENT	$684.89
BARON	ALPHONSE	POLICE	$32,488.59
BARONE	JUDITH	SCHOOL DEPARTMENT	$21,445.16
BASSETT	KRISTINE	SCHOOL DEPARTMENT	$54,916.92
BATES	PAMELA	SCHOOL DEPARTMENT	$1,882.60
BELAIR	DANA	SCHOOL DEPARTMENT	$52,570.74
BELLIVEAU	SARAH	SCHOOL DEPARTMENT	$2,088.99
BELOIN	GERALD	COUNCIL ON AGING	$9,702.90
BENNETT	LARRY	SCHOOL DEPARTMENT	$63,904.06
BERNARD	JOHN	SCHOOL DEPARTMENT	$5,689.39
BERNHARDT	FREDERICK	SCHOOL DEPARTMENT	$32,009.72
BERRY	NOREEN	SCHOOL DEPARTMENT	$63,980.14
BERTRAM	JULIANA	SCHOOL DEPARTMENT	$19,588.32
BERTRAM	PAULA	BOARD OF HEALTH	$19,842.22
BESARKARSKI	JAMES	SCHOOL DEPARTMENT	$65,234.85
BIERY	JEANETTE	SCHOOL DEPARTMENT	$16,808.19
BILOTTA	JOSEPH	SELECTMENS OFFICE	$950.00
BINGHAM	GREGORY	CEMETERY DEPARTMANT	$44,672.79
BINGHAM	JEFFREY	FIRE DEPARTMENT	$1,255.23
BIXBY	MITCHELL	SCHOOL DEPARTMENT	$1,443.96
BLAISDELL	ELAINE	SCHOOL DEPARTMENT	$78,606.30
BLOCK	LOIS	SCHOOL DEPARTMENT	$13,620.00
BOGGIO	MARJORIE	PLANNING BOARD	$12,744.10
BOONE	STEVEN	SCHOOL DEPARTMENT	$51,326.86
BORRESON	SHERRI	SCHOOL DEPARTMENT	$13,511.84
BOTTALICO	MICHAEL	POLICE	$6,988.39
BOUCHER	BRANDON	SCHOOL DEPARTMENT	$2,520.00
BOUCHER	KAREN	SCHOOL DEPARTMENT	$7,070.00
BOURGEOIS	DANIEL	POLICE	$75,583.64
BOURQUE	CAITLIN	SCHOOL DEPARTMENT	$70.00
BOURQUE	ROBERT	SCHOOL DEPARTMENT	$66,269.56
BOWEN	ROBERT	SELECTMENS OFFICE	$950.00
BOYLE	JASON	FIRE DEPARTMENT	$4,517.79
BOYLE	LOUISE	PLANNING BOARD	$15,659.13
BREAULT	JIMMY	DEPARTMENT OF PUBLIC WORKS	$40,961.57
BREAULT	LISA	SCHOOL DEPARTMENT	$210.00
BRIGGS	COURTNEY	SCHOOL DEPARTMENT	$924.62
BRIGGS	LINDA	SCHOOL DEPARTMENT	$22,658.67
BRISSON	ANN	SCHOOL DEPARTMENT	$33,462.86
BRITT	ROSEMARIE	SCHOOL DEPARTMENT	$10,910.37
BROCHU	CAROLYN	SCHOOL DEPARTMENT	$68,492.85
BROCHU	KAREN	ACCOUNTING OFFICE	$43,941.36
BROOKS	GEORGE	SCHOOL DEPARTMENT	$32,190.36
BROWN	STEPHEN	SCHOOL DEPARTMENT	$35.00
BURD	DONALD	SCHOOL DEPARTMENT	$2,240.00
BURLEY	KAREN	FIRE DEPARTMENT	$4,875.08
BURSCH	MARK	FIRE DEPARTMENT	$5,256.51
BURSEY	DONNA	SCHOOL DEPARTMENT	$4,198.95
BUTLER	VIVIAN	SCHOOL DEPARTMENT	$18,504.92
CALDWELL	LUCIE	SCHOOL DEPARTMENT	$5,031.00

**Works In more than one department

PAYROLL REPORT

EMPLOYEE		DEPARTMENT	GROSS
CALMES	LOXI JO	SCHOOL DEPARTMENT	$95,619.31
CAMERON	CATHERINE	SCHOOL DEPARTMENT	$9,800.62
CAMPBELL	CHERYL	SCHOOL DEPARTMENT	$37.38
CAMPOS	PAUL	SCHOOL DEPARTMENT	$3,385.33
CANNAVA	VINCENT	SCHOOL DEPARTMENT	$33,914.47
CARBONE	BETTY	SCHOOL DEPARTMENT	$56,552.14
CARDONE	JOSEPH	FIRE DEPARTMENT	$5,544.95
CARLSON	ALBERT	SCHOOL DEPARTMENT	$29,572.98
CARLSON	RICHARD	SCHOOL DEPARTMENT	$12,550.37
CAROLAN	ANN	SCHOOL DEPARTMENT	$31,525.60
CARON	LIZABETH	TECHNOLOGY DEPARTMENT	$30,334.04
CARON	TIMOTHY	SCHOOL DEPARTMENT	$350.00
CARRIER	LINDA	POLICE	$31,240.88
CASEY	LAURA	SCHOOL DEPARTMENT	$603.56
CASSAVANT	CHRISTOPHER	SCHOOL DEPARTMENT	$32,183.60
CATORIO	PHYLLIS	SCHOOL DEPARTMENT	$12,574.95
CAVAIOLI	SUSAN	SCHOOL DEPARTMENT	$53,451.61
CENTORINO	MARY	SCHOOL DEPARTMENT	$1,120.00
CHAMPAGNE	HEIDI	SCHOOL DEPARTMENT	$15,237.36
CHAPDELAINE	NANCY	SCHOOL DEPARTMENT	$21,525.30
CHAPLIN	BETH	SCHOOL DEPARTMENT	$13,131.24
CHATES	ALAN	SCHOOL DEPARTMENT	$3,444.00
CHEESMAN	MARTHA	SCHOOL DEPARTMENT	$57,786.22
CHRISTEN	MELONY	SCHOOL DEPARTMENT	$515.14
COHEN	DEBORAH	SCHOOL DEPARTMENT	$34,808.78
COLELLO-CLEAVES	DEBRA	SCHOOL DEPARTMENT	$62,333.07
COLLETTE	LINDA	SCHOOL DEPARTMENT	$56,024.00
COLLIER	WADE	SCHOOL DEPARTMENT	$14,394.02
COMEAU	CHRISTOPHER	ASSESSORS OFFICE	$983.00
COMEAU	KATHLEEN	ANIMAL CONTROLL	$12,180.00
CONNELLY	KATHLEEN	SCHOOL DEPARTMENT	$10,296.30
CONNERY	RHONDA	SCHOOL DEPARTMENT	$40,888.54
CONNERY	SEAN	POLICE	$56,196.87
CONRAD	MARY LYNN	SCHOOL DEPARTMENT	$58,104.77
CONSTANTINE	JANET	SCHOOL DEPARTMENT	$28,691.43
CONTUZZI	FRANK	POLICE	$6,601.57
COONEY	JAMES	SCHOOL DEPARTMENT	$241.89
COONEY	LAURIE	SCHOOL DEPARTMENT	$4,546.70
COONEY	TINA	SCHOOL DEPARTMENT	$7,892.28
COREY	NANCY	SCHOOL DEPARTMENT	$12,689.66
CORMIER	CATHERINE	SCHOOL DEPARTMENT	$11,520.28
CORMIER	KAREN	SCHOOL DEPARTMENT	$844.73
COSTON	RENE'	SCHOOL DEPARTMENT	$66.85
COTTON	JULIE	SCHOOL DEPARTMENT	$70.00
COURNOYER	JEFFREY	SCHOOL DEPARTMENT	$49,449.22
COURTEMANCHE	MICHAEL	SCHOOL DEPARTMENT	$51,172.66
COX	KEVIN	SCHOOL DEPARTMENT	$6,426.86
CRARY	ELLEN	SCHOOL DEPARTMENT	$26,644.32
CRELLIN	FRED	SCHOOL DEPARTMENT	$67,818.85
CRONIN	DANIEL	SELECTMENS OFFICE	$510.27
CRONIN	MARIAM	SCHOOL DEPARTMENT	$62,503.64
CULLINAN	HARRY	BUILDING DEPARTMENT	$40.00
CURLEY	SANDRA	SCHOOL DEPARTMENT	$45,978.30
CURRY	JAMES	POLICE	$5,066.22
CURTIS	BARBARA	SCHOOL DEPARTMENT	$54,738.50
CURTIS	HILARY	SCHOOL DEPARTMENT	$765.13
CURTIS	SCOTT	SCHOOL DEPARTMENT	$17,756.86
CUSHION	SHERRY	SCHOOL DEPARTMENT	$4,246.25
DAMON	DAVID	SCHOOL DEPARTMENT	$385.00
DAUKANTAS	CYNTHIA	SCHOOL DEPARTMENT	$79,500.32
DAVIS	PETER	FIRE DEPARTMENT	$1,233.73
DAVULIS	NATALIE	SCHOOL DEPARTMENT	$42,579.86
DEAN	ANNE	SCHOOL DEPARTMENT	$6,825.75
DEBETTENCOURT	REBECCA	SCHOOL DEPARTMENT	$7,417.30
DEBETTENCOURT	STEVEN	SELECTMENS OFFICE	$950.00
DEBETTENCOURT	TIMOTHY	SCHOOL DEPARTMENT	$23,128.54
DEBRUIN	JEANNE	COUNCIL ON AGING	$37,221.19
DEBRUIN	KEITH	POLICE	$3,551.07
DEFELICE	CHRISTINE	SCHOOL DEPARTMENT	$48,669.38
DEFELICE	JOSHUA	FIRE DEPARTMENT	$38,499.80
DEFREITAS	DAWN	SCHOOL DEPARTMENT	$31,281.28
DEMANCHE	DAVID	FINANCE DEPARTMENT	$24,732.81
DEMERS	DAVID	FIRE DEPARTMENT	$2,186.51
DEMING	CHARLES	POLICE	$78,464.23
DEMING	JOANNE	SCHOOL DEPARTMENT	$49,525.65
DEMING	SUSAN	SCHOOL DEPARTMENT	$15,351.07
DEMONT	TIMOTHY	SCHOOL DEPARTMENT	$236.26

**Works in more than one department

PAYROLL REPORT

EMPLOYEE		DEPARTMENT	GROSS
DERNER	JOY	SCHOOL DEPARTMENT	$1,540.00
DIAMANTOPOULOS	DALE	SCHOOL DEPARTMENT	$62,707.43
DIAMANTOPOULOS	SUSAN	SCHOOL DEPARTMENT	$39,462.64
DICKEY	PAUL	ASSESSORS OFFICE	$900.00
DICONZA	ROBERT	POLICE	$41,832.06
DIGERONIMO	LISA	SCHOOL DEPARTMENT	$1,645.00
DIK	CHRISTINE	SCHOOL DEPARTMENT	$140.00
DIK	SHARON	SCHOOL DEPARTMENT	$2,273.51
DILLON	SCOTT	FIRE DEPARTMENT	$44,908.79
DIPERRI	PAULA	SCHOOL DEPARTMENT	$30,117.92
DIPERRI	SANDRA	SCHOOL DEPARTMENT	$13,403.83
DOHERTY	SUSAN	COUNCIL ON AGING	$16,553.27
DOUGLAS	LINDA	SELECTMENS OFFICE	$29,799.20
DUFOUR	DONNA	SCHOOL DEPARTMENT	$49,879.71
DUFRESNE	DEREK	TECHNOLOGY DEPARTMENT	$52,335.36
DUPONT	PATRICIA	LIBRARY	$22,604.86
DUQUETTE	DONNA LEE	SCHOOL DEPARTMENT	$10,651.62
DUSEK	JAYNE	SCHOOL DEPARTMENT	$20,755.53
ELLIOTT	NICOLE	SCHOOL DEPARTMENT	$41,663.88
ERB	NANCY	SCHOOL DEPARTMENT	$5,959.02
EWEN	SHERYL	SCHOOL DEPARTMENT	$3,606.88
FAIRMAN	ANDREA	SCHOOL DEPARTMENT	$70.00
FARMER	PETER	SCHOOL DEPARTMENT	$13,254.21
FEEHAN	NOELLE	SCHOOL DEPARTMENT	$2,488.36
FIANDACA	PETER	DEPARTMENT OF PUBLIC WORKS	$34,354.65
FINCH	CAROLYN	SCHOOL DEPARTMENT	$26,723.07
FINLAY	WILLIAM	POLICE	$9,267.47
FJELD	DENISE	SCHOOL DEPARTMENT	$7,733.32
FLANAGAN	COLLEEN	SCHOOL DEPARTMENT	$24,205.85
FLANAGAN	SANDRA	SCHOOL DEPARTMENT	$35,767.32
FLUET	DIANE	SCHOOL DEPARTMENT	$234.14
FORCIER	CHARLES	SCHOOL DEPARTMENT	$54.89
FORD	MARIBETH	SCHOOL DEPARTMENT	$56,315.22
FORGUES	MAUREEN	SCHOOL DEPARTMENT	$267.60
FOTAKIS	MARGARET	SCHOOL DEPARTMENT	$800.00
FOYLE	MARY	SCHOOL DEPARTMENT	$33,172.14
FROST	NORMA	ASSESSORS OFFICE	$10,718.51
GAGNON	JOELLE	SCHOOL DEPARTMENT	$11,313.76
GALLAGHER	STACY	SCHOOL DEPARTMENT	$10,817.04
GALLOWAY	HELEN	SCHOOL DEPARTMENT	$18,030.33
GALVIN	SUSAN	SCHOOL DEPARTMENT	$11,295.72
GAMMEL	THOMAS	POLICE	$66,322.77
GATES	MARY	SCHOOL DEPARTMENT	$280.00
GAUTHIER	TARA	SCHOOL DEPARTMENT	$140.00
GEARIN	DAWN	SCHOOL DEPARTMENT	$52,539.08
GENDRON	JAMES	DEPARTMENT OF PUBLIC WORKS	$45,881.45
GENGLER	ELIZABETH	PARK DEPARTMENT	$3,672.75
GERANTE	JOSEPH	DEPARTMENT OF PUBLIC WORKS	$35,972.64
GEROU	GREGORY	POLICE	$3,316.98
GILE	MARY	SCHOOL DEPARTMENT	$18,911.58
GILLHAM	ELLEN	SCHOOL DEPARTMENT	$58,046.01
GIULIANI	KARYN	SCHOOL DEPARTMENT	$41,166.99
GLENNY	MICHAEL	FIRE DEPARTMENT	$123.10
GLENNY	SCOTT	FIRE DEPARTMENT	$58,270.66
GLENNY	SUSAN	SCHOOL DEPARTMENT	$34,403.89
GODFREY	WALTER	POLICE	$4,609.93
GOULD	ERNEST	POLICE	$53,576.85
GOULD	MARY	ACCOUNTING OFFICE**	$28,337.66
GOULD	ROBERT	POLICE	$3,956.53
GRAMMEL	ROBIN	SCHOOL DEPARTMENT	$3,431.75
GREENE	EMILIE	SCHOOL DEPARTMENT	$236.25
GREENE	JEREMIAH	SCHOOL DEPARTMENT	$2,450.00
GRUNDITZ	PAUL	POLICE	$10,700.59
GUSTUS	WILLIAM	SELECTMENS OFFICE	$13,099.50
HACHEY	JOYCE	CONSERVATION	$22,691.79
HAKEY	PATRICK	FIRE DEPARTMENT	$4,887.06
HALEY	JUDY	SCHOOL DEPARTMENT	$9,226.97
HALLERAN	NANCY	SCHOOL DEPARTMENT	$35,097.60
HALLETT	LOREN	SCHOOL DEPARTMENT	$8,770.65
HALLIGAN	JUDITH	SCHOOL DEPARTMENT	$10,515.72
HALLIGAN	MAUREEN	SCHOOL DEPARTMENT	$175.00
HAMEL	MICHELLE	SCHOOL DEPARTMENT	$2,205.00
HAMILTON	CAROL	SCHOOL DEPARTMENT	$8,107.84
HAMMAD	DINA	SCHOOL DEPARTMENT	$11,727.06
HANDY	MARIA	SCHOOL DEPARTMENT	$2,142.00
HANNIGAN	MICHAEL	SCHOOL DEPARTMENT	$46,444.50
HARDING	ANDREW	FIRE DEPARTMENT	$164.52

**Works in more than one department

PAYROLL REPORT

EMPLOYEE		DEPARTMENT	GROSS
HARDY	ANGEL	SCHOOL DEPARTMENT	$210.00
HARRIGAN	DEBORAH	SCHOOL DEPARTMENT	$53,119.71
HARRINGTON	AMY	SCHOOL DEPARTMENT	$60,282.55
HARRINGTON	CHRISTOPHER	FIRE DEPARTMENT	$5,860.48
HARVEY	PAULA	SCHOOL DEPARTMENT	$3,513.62
HAUEISEN	DAVID	FIRE DEPARTMENT	$479.49
HAVEY	MAUREEN	SCHOOL DEPARTMENT	$70.00
HAYWARD	SHEILA	SCHOOL DEPARTMENT	$23,837.87
HAZZARD	THOMAS	LIBRARY	$4,707.80
HEALEY	NANCY	SCHOOL DEPARTMENT	$3,137.00
HEBERT	RENE'	SCHOOL DEPARTMENT	$2,660.00
HEENAN	MICHAEL	SCHOOL DEPARTMENT	$490.00
HENSHAW	JOHN	SCHOOL DEPARTMENT	$70.00
HERRICK	KATHRYN	CLERK/TREASURER/TAX COLLECTOR**	$50,211.71
HERRICK	TARA	SCHOOL DEPARTMENT	$9,447.60
HERTEL	MEREDITH	SCHOOL DEPARTMENT	$45,080.24
HICKS	WILLIAM	SCHOOL DEPARTMENT	$61,963.07
HIGGINS	CAROL	SCHOOL DEPARTMENT	$5,467.20
HILL	PAMELA	SCHOOL DEPARTMENT	$25,312.78
HILL	ROBERT	SCHOOL DEPARTMENT	$57,468.13
HIRSCH	DAVID	FIRE DEPARTMENT	$34.00
HIRSCH	JOAN	SCHOOL DEPARTMENT	$11,456.36
HITCHCOCK	DEBRA	SCHOOL DEPARTMENT	$798.93
HOCHSTEIN	KEITH	SCHOOL DEPARTMENT	$80,257.98
HOFFMAN	JAMES	SCHOOL DEPARTMENT	$210.00
HOFFMAN-BRUNELL	INEZ	SCHOOL DEPARTMENT	$13,984.95
HOLM	DIANNA	SCHOOL DEPARTMENT	$215.00
HOOD-BIKER	JENNIFER	SCHOOL DEPARTMENT	$42,280.24
HORNE	JOHN	SCHOOL DEPARTMENT	$1,749.97
HOWARD	ERIN	FIRE DEPARTMENT	$33,435.81
HOWARD	RICHARD	FIRE DEPARTMENT	$599.52
HOWARD	STANLEY	SCHOOL DEPARTMENT	$420.00
HURLEY	CHARLES	SCHOOL DEPARTMENT	$36,260.00
HURLEY	LYNN	SCHOOL DEPARTMENT	$70.00
HYATT	PETER	FIRE DEPARTMENT	$2,350.01
JACKSON	AURORA	SCHOOL DEPARTMENT	$4,266.32
JAMES	JANET	FIRE DEPARTMENT	$33,602.13
JOHNSON	JULIAN	SCHOOL DEPARTMENT	$35,255.26
JOHNSON	NANCY	SCHOOL DEPARTMENT	$35.00
JOHNSON	VICKI	SCHOOL DEPARTMENT	$135.00
JONES	DANIEL	FIRE DEPARTMENT	$40,288.39
JONES	JEAN	SCHOOL DEPARTMENT	$50,954.45
JONES	JON	FIRE DEPARTMENT	$65.12
JONES	KENNETH	FIRE DEPARTMENT	$6,049.66
KARIS	HARRIS	SCHOOL DEPARTMENT	$47,066.08
KARIS	NANCY	SCHOOL DEPARTMENT	$54,776.01
KARKANE	TODD	SCHOOL DEPARTMENT	$33,995.83
KATZ	CARYN	SCHOOL DEPARTMENT	$40,938.43
KAZANJIAN	PATRICK	FIRE DEPARTMENT	$1,083.79
KEEFER	CATHERINE	SCHOOL DEPARTMENT	$8,358.33
KEEGAN	ANNA	SCHOOL DEPARTMENT	$47,385.23
KEENEY	DENNIS	SCHOOL DEPARTMENT	$57,878.64
KELLEY	GARY	DEPARTMENT OF PUBLIC WORKS	$35,662.17
KELLEY	JERIANNE	SCHOOL DEPARTMENT	$21,870.65
KELLY	ANNETTE	SCHOOL DEPARTMENT	$2,260.12
KEMP	KAREN	LIBRARY	$30,669.50
KENNEDY	JOHN	FIRE DEPARTMENT	$110.50
KENNEY	SARA	SCHOOL DEPARTMENT	$38,291.65
KETELAAR	CLAIRE	SCHOOL DEPARTMENT	$60,807.33
KIMBALL	SHARON	SCHOOL DEPARTMENT	$62,329.94
KNOLL	RONALD	POLICE	$813.48
KROMER	NICOLE	SCHOOL DEPARTMENT	$48,804.43
KRYSIAK	PATRICIA	SCHOOL DEPARTMENT	$60,398.06
KURLAND	GAIL	SCHOOL DEPARTMENT	$1,435.00
KYAJOHNIAN	STEVEN	SCHOOL DEPARTMENT	$58,300.40
LACHANCE	CLAUDETTE	SCHOOL DEPARTMENT	$10,985.90
LAFFOND	KATHERINE	LIBRARY	$470.58
LAHTI	JUDITH	SCHOOL DEPARTMENT	$46,337.38
LAMBERT	RICHARD	POLICE	$75,312.12
LAMOTHE	RONALD	SELECTMENS OFFICE	$27.40
LAMOUREUX	CHRISTOPHER	FIRE DEPARTMENT	$476.58
LANDI	JESSICA	SCHOOL DEPARTMENT	$6,187.07
LANDI	MARY	SCHOOL DEPARTMENT	$26,706.61
LANTRY	REBECCA	SCHOOL DEPARTMENT	$19,615.07
LAROCHELLE	SUZANNE	SCHOOL DEPARTMENT	$98.38
LASERTE	SANDRA	SCHOOL DEPARTMENT	$63,972.64
LAURIN	JENNIFER	SCHOOL DEPARTMENT	$23,663.19

**Works in more than one department

PAYROLL REPORT

EMPLOYEE		DEPARTMENT	GROSS
LAVOIE	DONNA	SCHOOL DEPARTMENT	$15,249.58
LEARY	TIMOTHY	SCHOOL DEPARTMENT	$16,760.66
LEAVITT	JANET	ASSESSORS OFFICE	$4,027.66
LEBLANC	BRIAN	FIRE DEPARTMENT	$6,171.42
LEBLANC	GENE	SCHOOL DEPARTMENT	$30,086.96
LEBLANC	JOSEPH	FIRE DEPARTMENT	$1,260.52
LEET	AMY	SCHOOL DEPARTMENT	$10,938.67
LEFEBVRE	BARBARA	ASSESSORS OFFICE	$16,474.32
LEOMBRUNO	BENJAMIN	SCHOOL DEPARTMENT	$246.38
LEONARD	HEATHER	SCHOOL DEPARTMENT	$3,253.24
LEPPALA	THOMAS	PARK DEPARTMENT	$43,669.80
LETARTE	DONALD	POLICE	$7,014.68
LIATSIS	FRED	ASSESSORS OFFICE	$900.00
LIATSIS	STEPHANIE	SCHOOL DEPARTMENT	$177.50
LIZEK	MAURA	SCHOOL DEPARTMENT	$40,661.42
LONDA	JOANNE	SCHOOL DEPARTMENT	$47,551.36
LONDA	JOHN	SCHOOL DEPARTMENT	$56,651.76
LOUREIRO	CAITLIN	SCHOOL DEPARTMENT	$7,453.50
LOVELL	AMANDA	SCHOOL DEPARTMENT	$140.00
LUCASON	PAUL	FIRE DEPARTMENT	$4,581.60
MACDOUGALL	LORRAINE	SCHOOL DEPARTMENT	$49,125.65
MACKAY	KRISTIN	SCHOOL DEPARTMENT	$61,706.94
MADIGAN	CATHERINE	SCHOOL DEPARTMENT	$3,559.88
MAHONEY	SUZANNE	SCHOOL DEPARTMENT	$36,475.20
MAHONEY-LAWLOR	PATRICIA	SCHOOL DEPARTMENT	$3,945.14
MAILLOUX	HEATHER	SCHOOL DEPARTMENT	$334.82
MAILLOUX	SANDRA	LIBRARY	$17,303.81
MAISTRELLIS	RITA	SCHOOL DEPARTMENT	$61,995.64
MAJOR	JAMES	SCHOOL DEPARTMENT	$6,666.01
MAJOR	LYNN	SCHOOL DEPARTMENT	$42,383.07
MAKI	MARIA	SCHOOL DEPARTMENT	$1,295.00
MALATOS	RHONDA	SCHOOL DEPARTMENT	$54,916.92
MAN	BRYAN	SCHOOL DEPARTMENT	$675.00
MANTINO	RISA	SCHOOL DEPARTMENT	$219.84
MARABELLO	JOAN	SCHOOL DEPARTMENT	$112.50
MARABELLO	SUSAN	SCHOOL DEPARTMENT	$4,582.50
MARCIL	MICHAEL	POLICE	$12,798.83
MARINI	STEPHEN	SCHOOL DEPARTMENT	$13,254.21
MARINO	JAMES	POLICE	$69,587.73
MARSHALL	JANET	SCHOOL DEPARTMENT	$53,042.64
MARTIN	EDWARD	SCHOOL DEPARTMENT	$14,606.92
MARTIN	KAREN	SCHOOL DEPARTMENT	$72,823.40
MARTINEAU	ELIZABETH	SCHOOL DEPARTMENT	$3,400.25
MARTINEAU	ERIC	FIRE DEPARTMENT	$1,044.20
MARTINEAU	ROBERT	FIRE DEPARTMENT	$716.53
MASSAK	JOHN	FIRE DEPARTMENT	$9,265.40
MASSAK	KIMBERLY	POLICE	$7,619.95
MASSIE	SHARON	SCHOOL DEPARTMENT	$13,757.65
MATTSON	ETHEL	COUNCIL ON AGING	$1,634.76
MCCARRON	KATHLEEN	LIBRARY	$17,968.32
MCCARTHY-GUILLETTE	PATRICIA	SCHOOL DEPARTMENT	$15,360.00
MCCAULIFF	PETER	SCHOOL DEPARTMENT	$63,534.05
MCCLUSKEY	ERIN	SCHOOL DEPARTMENT	$733.38
MCCLUSKEY	FRANCES	SCHOOL DEPARTMENT	$31,281.28
MCCLUSKEY	MARY	FIRE DEPARTMENT	$35,133.07
MCCULLAH	LISA	SCHOOL DEPARTMENT	$1,282.63
MCCULLAH	SHARON	SCHOOL DEPARTMENT	$57,928.01
MCGUIGAN	KATHLEEN	SCHOOL DEPARTMENT	$63,112.64
MCGUIRE	KATHLEEN	SCHOOL DEPARTMENT	$2,570.84
MCHALE	SUSAN	SCHOOL DEPARTMENT	$53,541.43
MCLAUGHLIN	JEAN	SCHOOL DEPARTMENT	$44,220.76
MCLAUGHLIN	PATRICIA	SCHOOL DEPARTMENT	$10,081.00
MCMANUS	CAROL	SCHOOL DEPARTMENT	$2,170.00
MCMASTER	LINDA	SCHOOL DEPARTMENT	$37.38
MCMURRAY	PHILIP	SCHOOL DEPARTMENT	$55,116.92
MCQUAID	JOANNE	SCHOOL DEPARTMENT	$20,467.64
MELENDY	DEBRA	SCHOOL DEPARTMENT	$1,543.59
MELLO-CONROY	SUSAN	SCHOOL DEPARTMENT	$4,085.20
MEYER	RENALD	SCHOOL DEPARTMENT	$29,800.21
MEZZETTI	LEIGH	TAX COLLECTORS OFFICE	$24,323.91
MICKOLA	CAROL	SCHOOL DEPARTMENT	$5,236.90
MICKSON	SANDRA	SCHOOL DEPARTMENT	$280.00
MILLER	JODY	DEPARTMENT OF PUBLIC WORKS	$32,749.90
MITCHELL	GRAGLENN	SCHOOL DEPARTMENT	$10,280.00
MOBLEY	CYNTHIA	SCHOOL DEPARTMENT	$9,522.38
MONACO	ROBIN	SCHOOL DEPARTMENT	$5,091.39
MOODIE	JUDITH	SCHOOL DEPARTMENT	$31,752.63

**Works in more than one department

PAYROLL REPORT

EMPLOYEE		DEPARTMENT	GROSS
MOORE	JEROME	POLICE	$3,629.21
MOORE	KAREN	SCHOOL DEPARTMENT	$17,364.44
MORIN	ELAINE	TAX COLLECTORS OFFICE	$23,856.32
MORIN	LOUISE	SCHOOL DEPARTMENT	$47,707.65
MORRISON	WILLIAM	POLICE	$2,621.57
MORSE	MELANIE	SCHOOL DEPARTMENT	$35.00
MURPHY	SARAH	SCHOOL DEPARTMENT	$3,638.25
MURPHY	TAYLOR	SCHOOL DEPARTMENT	$613.29
MURRAY	JANE	SCHOOL DEPARTMENT	$64,029.06
MUSGROVE	DOROTHY	ASSESSORS OFFICE	$14,754.24
NANGLE	JENNIFER	SCHOOL DEPARTMENT	$25,255.46
NASH	JESSICA	SCHOOL DEPARTMENT	$2,349.36
NASS	GENEVIEVE	SCHOOL DEPARTMENT	$38,128.39
NELSON	BARBARA	SCHOOL DEPARTMENT	$56,315.22
NELSON	CHERYL	SCHOOL DEPARTMENT	$48,151.36
NEWELL	ANTHONY	FIRE DEPARTMENT	$36,723.79
NEWELL	JOAN	SCHOOL DEPARTMENT	$12,017.03
NORMANDIN	LISA	BUILDING DEPARTMENT**	$24,873.80
NORMANDIN	TIMOTHY	SCHOOL DEPARTMENT	$63,238.45
NOWD	DIANE	SCHOOL DEPARTMENT	$54,916.92
NUNEZ	LAKISHA	SCHOOL DEPARTMENT	$795.65
O'CONNOR	VANITY	SCHOOL DEPARTMENT	$1,535.57
O'MALLEY	KEVIN	SCHOOL DEPARTMENT	$350.00
O'MALLEY	MARK	SCHOOL DEPARTMENT	$69,064.85
O'NEILL	JEFFREY	SCHOOL DEPARTMENT	$54,516.92
PAPADOPOULOS	LINDA	SCHOOL DEPARTMENT	$46,053.23
PAQUETTE	LOUISE	TOWN CLERKS OFFICE	$19,459.94
PARADISE	DONALD	COUNCIL ON AGING	$6,560.00
PARENT	LOUISE	SCHOOL DEPARTMENT	$39,637.89
PATON	KENNETH	FIRE DEPARTMENT	$7,411.54
PATON	KEVIN	FIRE DEPARTMENT	$5,339.86
PATON	TIMOTHY	FIRE DEPARTMENT	$1,408.42
PEACOCK	TARA	SCHOOL DEPARTMENT	$429.75
PEARSON	NORA	SCHOOL DEPARTMENT	$5,813.95
PENTEDEMOS	CHRISTOPHER	FIRE DEPARTMENT	$214.84
PERRY	TAMMY	SCHOOL DEPARTMENT	$9,776.41
PETERSEN	ELIZABETH	SCHOOL DEPARTMENT	$10,345.98
PETROWICZ	SUSAN	SCHOOL DEPARTMENT	$60,309.64
PHELPS	BROOKE	SCHOOL DEPARTMENT	$140.00
PICHNARCIK	PATRICIA	SCHOOL DEPARTMENT	$8,463.19
PIERCE	JUDITH	SCHOOL DEPARTMENT	$16,761.66
POITRAS	JASON	POLICE	$67,664.03
PORTER	PAUL	POLICE	$45,733.59
POULIOT	MELANIE	SCHOOL DEPARTMENT	$2,027.50
POWERS	MARY	SCHOOL DEPARTMENT	$3,360.00
PRATT	HEATHER	SCHOOL DEPARTMENT	$1,977.60
PRICE	AGNES	SCHOOL DEPARTMENT	$524.12
PROCTOR	JAYNE	SCHOOL DEPARTMENT	$2,192.00
PROCTOR	PEGGY	SCHOOL DEPARTMENT	$56,093.86
PROGIN	BERNARD	DEPARTMENT OF PUBLIC WORKS	$40,975.99
PROGIN	JOSEPH	DEPARTMENT OF PUBLIC WORKS	$34,314.19
PUGSLEY	GEORGE	DEPARTMENT OF PUBLIC WORKS	$24,614.80
PULSIFER	GEORGETTE	SCHOOL DEPARTMENT	$103.14
QUEEN	ANNETTE	SCHOOL DEPARTMENT	$10,309.33
QUIRION	KRISTY	SCHOOL DEPARTMENT	$2,001.19
RADFORD	LYNN	SCHOOL DEPARTMENT	$42,458.72
RAHAIM	NANCY	SCHOOL DEPARTMENT	$63,987.73
RASH	KAREN	SCHOOL DEPARTMENT	$49,449.22
REARDON	SUSAN	SCHOOL DEPARTMENT	$34,669.63
REYNOLDS	ZARRIN-TAJ	SCHOOL DEPARTMENT	$13,264.21
RICCI	JAMES	FIRE DEPARTMENT	$9,384.58
RICHARDSON	HEATHER	SCHOOL DEPARTMENT	$42,849.22
RICKERT	JANICE	POLICE	$55,895.28
RILEY	DIANE	SCHOOL DEPARTMENT	$54,619.71
ROBUCCIO	ROBERT	SCHOOL DEPARTMENT	$2,667.00
RODGERS	DAVID	SELECTMENS OFFICE	$1,145.96
RODRIQUENZ	JOHN	DEPARTMENT OF PUBLIC WORKS	$66,605.20
ROMANO	JOSHUA	SCHOOL DEPARTMENT	$17,221.41
ROMANO	PAUL	SCHOOL DEPARTMENT	$66,104.36
ROY	ROBERT	SCHOOL DEPARTMENT	$33,604.72
ROY	RYAN	SCHOOL DEPARTMENT	$2,520.00
SABATINI	SARAH	SCHOOL DEPARTMENT	$52,719.71
SADKIN	AMY	LIBRARY	$872.10
SAMPSON	CHARLES	FIRE DEPARTMENT	$1,703.89
SAMPSON	GERALDINE	SCHOOL DEPARTMENT	$29,323.86
SAMWELL	KATHLEEN	SCHOOL DEPARTMENT	$9,050.00
SANTRY	TIMOTHY	SCHOOL DEPARTMENT	$12,773.12

**Works in more than one department

PAYROLL REPORT

EMPLOYEE		DEPARTMENT	GROSS
SAUVAGEAU	MICHAEL	BUILDING DEPARTMENT	$54,612.19
SCHAFF	G STEPHEN	SCHOOL DEPARTMENT	$35,834.05
SCHEID	BETH ANN	SCHOOL DEPARTMENT	$1,155.00
SCHEID	HARALD	ASSESSORS OFFICE	$16,873.52
SCHENCK	JUDITH	SCHOOL DEPARTMENT	$43,919.00
SCHEPANOVSKY	KRISTA	SCHOOL DEPARTMENT	$5,544.45
SCOUTEN	CORINNE	SCHOOL DEPARTMENT	$1,778.21
SCOUTEN	PERCY	DEPARTMENT OF PUBLIC WORKS	$35,216.01
SHARKEY	JAMES	WIRING INSPECTOR	$23,364.03
SHAVER	MICHAEL	SCHOOL DEPARTMENT	$140.00
SHAW	CHERYL	PARK DEPARTMENT	$499.50
SHEA	TIMOTHY	FIRE DEPARTMENT	$464.68
SHEASGREEN	TIMOTHY	SCHOOL DEPARTMENT	$46,837.93
SHELDON	MICHAEL	DEPARTMENT OF PUBLIC WORKS	$11,792.62
SHORT	ERIC	SCHOOL DEPARTMENT	$47,177.27
SICILIANO	PATRICIA	SCHOOL DEPARTMENT	$21,470.39
SKILLINGS	TERRI	SCHOOL DEPARTMENT	$8,169.53
SMETANA	DONNA	LIBRARY	$10,506.52
SMITH	BRUCE	SCHOOL DEPARTMENT	$2,667.00
SMITH	JESSIE	SCHOOL DEPARTMENT	$2,653.56
SMITH	PAMELA	ACCOUNTING OFFICE	$28,376.00
SMITH	PAUL	SCHOOL DEPARTMENT	$71,008.12
SNYDER	ERINANNE	SCHOOL DEPARTMENT	$55,640.00
SPAGNUOLO	ROCCO	SCHOOL DEPARTMENT	$17,708.68
SPARLING	PAMELA	SCHOOL DEPARTMENT	$49,166.52
SPEARE	CHRISTINA	SCHOOL DEPARTMENT	$11,921.16
SPOTKILL	VALERIE	SCHOOL DEPARTMENT	$16,352.13
SPRING	EMILY	SCHOOL DEPARTMENT	$70.00
ST JEAN	ROGER	SCHOOL DEPARTMENT	$69,749.85
ST PIERRE	RUSSELL	POLICE	$10,336.63
STACHOWICZ	NANCY	SCHOOL DEPARTMENT	$13,350.31
STANTON	JACQUELINE	SCHOOL DEPARTMENT	$58,888.95
STARR	THOMAS	SCHOOL DEPARTMENT	$19,248.00
STATELER	TINA	SCHOOL DEPARTMENT	$9,342.16
STEELE	DARLENE	SCHOOL DEPARTMENT	$7,085.99
STEELE	JAMES	SCHOOL DEPARTMENT	$7,942.64
STEWART	MARGARET	ACCOUNTING OFFICE	$16,699.36
STILLMAN	COLLEEN	SCHOOL DEPARTMENT	$4,633.67
STONE	LISA	SCHOOL DEPARTMENT	$58,648.88
SUDOLNIK	MARY	SCHOOL DEPARTMENT	$3,430.00
SULLENDER	ROSEMARY	SCHOOL DEPARTMENT	$1,770.16
SULLIVAN	MARTHA	SCHOOL DEPARTMENT	$41,559.57
SULLIVAN	PATRICK	FIRE DEPARTMENT	$5,845.54
SWIECICKI	RUTH	COUNCIL ON AGING	$804.13
SWIFT	CHARLES	SCHOOL DEPARTMENT	$16,247.03
SZOCIK	ROBERT	FIRE DEPARTMENT	$55.65
SZOCIK	SHEILA	SCHOOL DEPARTMENT	$34,529.57
TAKVORIAN	SUZANNE	SCHOOL DEPARTMENT	$15,347.10
TALLMAN	SUSAN	LIBRARY	$40,714.56
TARLETON	CHARLES	SCHOOL DEPARTMENT	$47,030.57
TASCA	MELISSA	SCHOOL DEPARTMENT	$60.00
TASSOS	FOTINI	SCHOOL DEPARTMENT	$13,029.98
TAYLOR	BARBARA	DEPARTMENT OF PUBLIC WORKS	$23,940.77
THIBEAULT	DANA	DEPARTMENT OF PUBLIC WORKS	$45,956.50
THOMPSON	CHLOE	LIBRARY	$320.54
THOMPSON	DANIELLE	SCHOOL DEPARTMENT	$38,695.79
THOMPSON	DENISE	SCHOOL DEPARTMENT	$7,584.92
TORRISI	SHARON	SCHOOL DEPARTMENT	$1,750.00
TOUPIN	KIMBERLY	SCHOOL DEPARTMENT	$105.00
TOUSIGNANT	KARMA	SCHOOL DEPARTMENT	$47,556.81
TRODELLO	JOSEPH	SCHOOL DEPARTMENT	$54,740.92
TRUAX	ROBERT	SCHOOL DEPARTMENT	$58,583.80
TSIAKALOS	ELENI	SCHOOL DEPARTMENT	$2,471.20
TUCKER	AMBER	SCHOOL DEPARTMENT	$17,760.02
TURNER	SANDRALEE	SCHOOL DEPARTMENT	$61,335.86
UNDERWOOD	JOEL	SCHOOL DEPARTMENT	$30,173.36
USMAN	NANCY	SCHOOL DEPARTMENT	$14,099.76
VAILLENCOURT	SHEILA	SCHOOL DEPARTMENT	$964.89
VALLEE	PAMELA	SCHOOL DEPARTMENT	$48,149.43
VEILLETTE	LAURA	SCHOOL DEPARTMENT	$16,645.16
VICKERY	LINDA	SCHOOL DEPARTMENT	$70.00
WAGNER	DARLENE	SCHOOL DEPARTMENT	$68.86
WALKONEN	EDWARD	POLICE	$24,448.91
WALSH	ERIN	SCHOOL DEPARTMENT	$911.07
WALSH	HEATHER	SCHOOL DEPARTMENT	$946.53
WANAMAKER	LISA	TREASURERS OFFICE	$33,271.09
WARREN	ROBIN	SCHOOL DEPARTMENT	$42,792.04

**Works in more than one department

PAYROLL REPORT

EMPLOYEE		DEPARTMENT	GROSS
WASELESKI	ELIZABETH	SCHOOL DEPARTMENT	$3,993.64
WASS	JOYCE	SCHOOL DEPARTMENT	$7,500.00
WASSO PUKAITE	ALEXIS	SCHOOL DEPARTMENT	$50,072.22
WATERMAN	KELLY	SCHOOL DEPARTMENT	$17,182.58
WATSON	EDMUND	SCHOOL DEPARTMENT	$229.50
WATT	MELISSA	SCHOOL DEPARTMENT	$384.36
WEBER	NANCY	SCHOOL DEPARTMENT	$13,264.21
WEISMAN	MARY ANN	SCHOOL DEPARTMENT	$13,393.18
WELLS	ROBERT	SCHOOL DEPARTMENT	$8,595.99
WHITAKER	MARY	SCHOOL DEPARTMENT	$54,122.50
WHITNEY	JANE	SCHOOL DEPARTMENT	$58,046.01
WHITNEY	STEVEN	POLICE	$50,022.12
WIITA	MARLENE	SCHOOL DEPARTMENT	$18,859.45
WILLIAMS	GARY	PLUMBING AND GAS INSPECTOR	$17,884.80
WILLIAMS	LAURA	SELECTMENS OFFICE	$43,441.18
WINCHESTER	NORMAN	POLICE	$5,743.44
WOLEJKO	GAIL	SCHOOL DEPARTMENT	$56,263.24
WOOD	DEBRA	SCHOOL DEPARTMENT	$5,578.24
WOOD	JUDITH	SCHOOL DEPARTMENT	$49,607.74
WRIGHT	BRENDA	FIRE DEPARTMENT	$1,514.15
WRIGHT	CHRISTINA	SCHOOL DEPARTMENT	$22,873.35
WRIGHT	YVONNE	COUNCIL ON AGING	$7,002.21
XARRAS	LAURIE	SCHOOL DEPARTMENT	$15,908.64
YOURK	TAMARA	SCHOOL DEPARTMENT	$37,800.01
ZALESKA	PAULINE	SCHOOL DEPARTMENT	$12,663.58
ZAYKA	CATHERINE	SCHOOL DEPARTMENT	$35,693.80
ZIVOJINOVIC	DEBRA	SCHOOL DEPARTMENT	$39,927.49
ZOTTOLI	MARGARET	SCHOOL DEPARTMENT	$44,067.18
GRAND TOTAL GROSS WAGES FOR 2003			$12,956,848.27

**Works in more than one department

EMERGENCY

DIAL 911

BE SURE TO GIVE YOUR NAME AS WELL AS THE NATURE OF YOUR EMERGENCY. DO NOT HANG UP UNTIL YOU ARE SURE THAT YOUR MESSAGE HAS BEEN UNDERSTOOD.

FOR ANSWERS ON	CALL THE:	NUMBER IS (978)
Accounting	Accountant's Office	582-4139
Assessments	Assessors' Office	582-4145
Bills and Accounts	Treasurer	582-4130
Birth Certificates	Town Hall	582-4131
Building	Building Inspector	582-4146
Cemeteries	Cemetery Superintendent	582-4163
Conservation Matters	Conservation Commission	582-4143
Death Certificates	Town Clerk	582-4131
Dog Licenses	Town Clerk	582-4131
Dog Problems	Police Station	582-4150
Elder Services/Programs	Council on Aging	582-4166
Elections	Town Clerk	582-4131
Fire (Routine)	Fire Station	582-4155
General Information	Town Hall	582-4132
Health Matters	Board of Health	582-4135
Highways	Highway Superintendent	582-4160
Housing Authority	Housing Authority Office	345-7655
Library	Library Manager	582-4140
Licensing	Selectmen's Office	582-4144
Marriage Certificates	Town Clerk	582-4131
Notary Public	Town Clerk	582-4131
Nursing (Town)	Town Nurse	582-6702
Nursing (School)	School Nurse	582-4107
Operational Issues (Town)	CAFO (Chief Admin. Financial Officer)	582-4164
Payroll	Payroll Department	582-4134
Permits- Burning/Oil Burner	Fire Chief	582-4155
Personnel	Treasurer	582-4131
Planning	Planning Board	582-4147
Plumbing Permits	Town Hall	582-4132
Police (Routine)	Police Station	582-4150
Recreation	Park Commissioners	582-4165
Sanitary Inspections	Nashoba, Ayer	1-800- 427-9762
Schools	Superintendent of Schools	582-4100
Taxes	Tax Collector	582-4131
Trees	Highway Department	582-4160
Veterans' Services	Veterans' Agent	582-4144
Voting and Registration	Town Clerk	582-4131
Water	Water District	342-9211
Wiring Permits	Town Hall	582-4132
Zoning	Building Inspector	582-4146